Bucchi s.r.l. via Bonsi, 57 | 48022 Lugo, Ravenna (RA) Italy
T. 0039 0545 901001 | F. 0039 0545 32232 / 212385
www.bucchi.it | info@bucchi.it

dal 1973

FF ADAPTER

Adapters for IBC tanks

Fittings



MODEL CODE: 0102454

TECHNICAL DATA SHEET

Connectivity standard:	Internal thread GAS cylindrical ISO 228/1. Internal thread DIN 513
Material:	Polypropylene (PP) EPDM
Color:	Black (RAL 9011)

Torques

Filettature - *Threads - Filetts*	1/4”	3/8”	1/2”	3/4”	1”	1”1/4	1”1/2	2”
Serraggio Max materiale PP - *Max Tightening PP material - Serrage Max Matériel PP*	2 Nm	3 Nm	6 Nm	8 Nm	10 Nm	15 Nm	20 Nm	25 Nm
Serraggio Max materiale PA - *Max Tightening PA material - Serrage Max Matériel PA*	3 Nm	5 Nm	8 Nm	10 Nm	12 Nm	17 Nm	30 Nm	35 Nm

The maximum tightening torques specified for fittings Bucchi depend on the compliance of the threads that reference to international specifications on the threads.

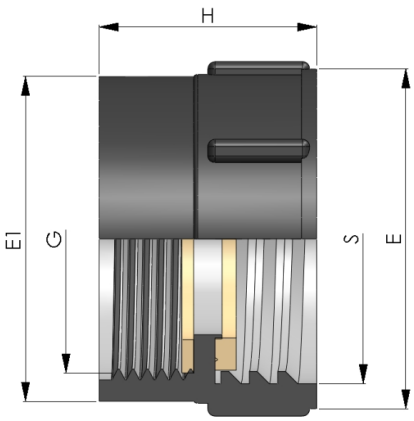

FF ADAPTER female threaded end DIN S60x6 and G with seal in EPDM

Dimensions

Code	S	G	H	E
0102454.050566	S60x6	3/4"	44	72