TECHNICAL CATALOGUE

WASHING MACHINE VALVES



ITAP AT A GLANCE

THE COMPANY

ITAP SpA, founded in Lumezzane (Brescia) in 1972, is currently one of the leading production companies in Italy of **valves, fittings and distribution manifolds** for plumbing and heating systems.

Thanks to fully automated production processes, with 85 transfer machines and 55 assembly lines, we are able to produce 400,000 pieces per day.

Our innate pursuit for innovation and observance of technical regulations is supported by the company certification ISO 9001. The company has always considered its focus on quality as the main tool to obtain significant business results: today ITAP SpA is proud to offer products bearing the approval of numerous international certifying bodies.





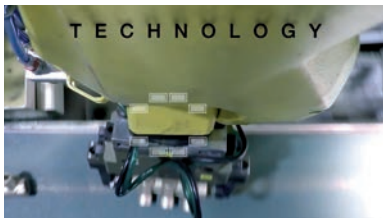

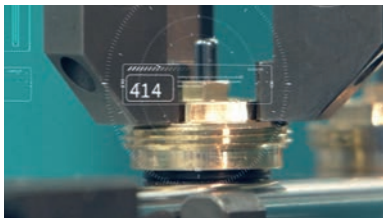

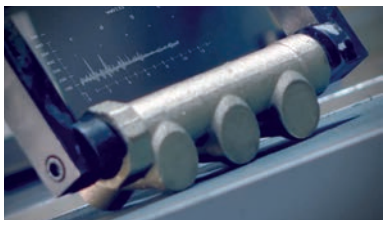





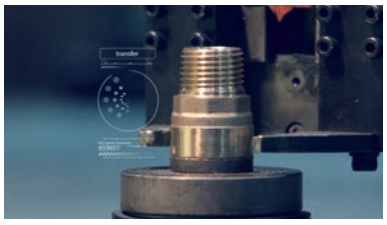

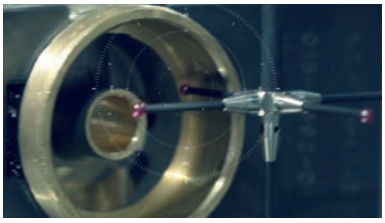





ITAP products have obtained approvals by more than 30 certification bodies from all over the world.

220 Washing machine valve



SIZE	PRESSURE	CODE	PACKING
1/2" (DN 15)	8bar/116psi	2200012U	12/84

CERTIFICATIONS

TECHNICAL SPECIFICATIONS

Available size: 1/2”x3/4”.
Male thread for washing machine.
Body in chrome-plated brass.
Minimum and maximum working temperatures: 0°C, 80°C.
Threads: ISO 228 (equivalent to DIN EN ISO 228 and BS EN ISO 228).

OVERALL DIMENSIONS

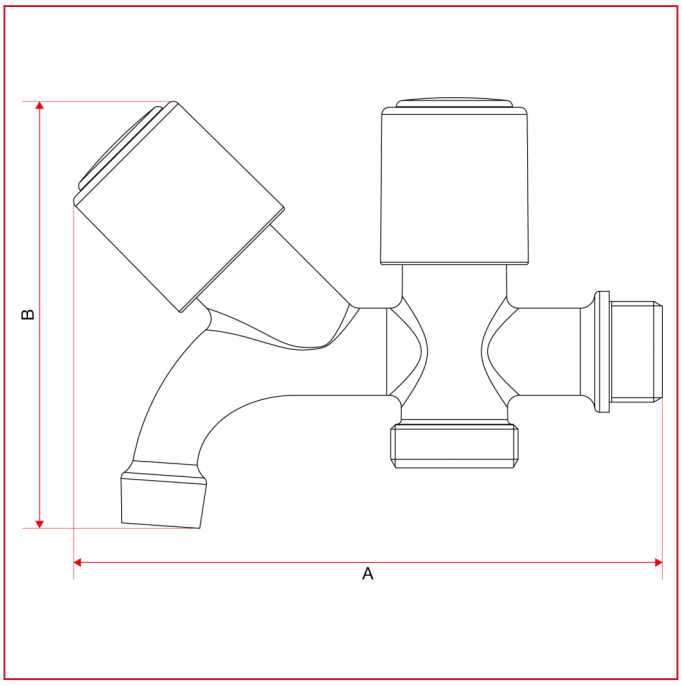

	1/2"
DN	15
A	121,7
B	88
Kg/cm2 bar	8
LBS - psi	116

MATERIALS

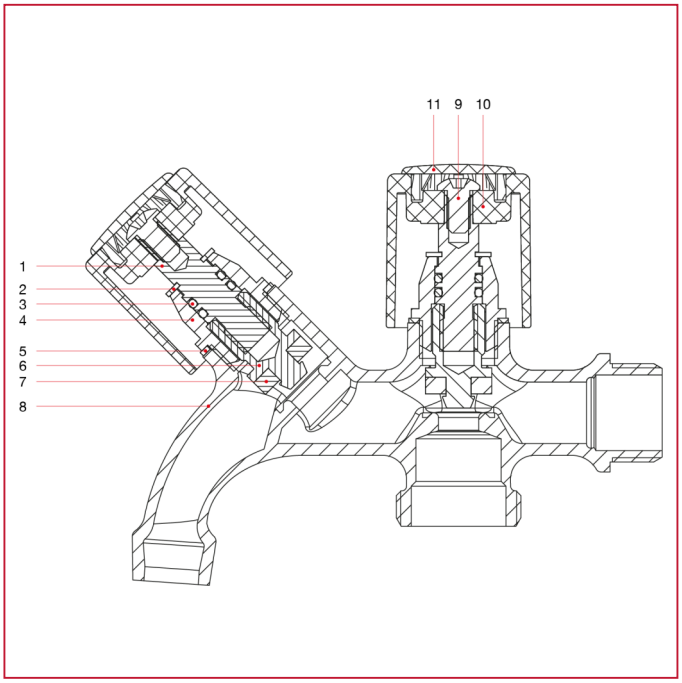

POS.	DESCRIPTION	N.	MATERIAL
1	Pin	2	Brass CW614N
2	Ring	2	Stainless steel AISI 302
3	O-ring	4	NBR
4	Cap	2	Brass CW614N
5	Washer	2	Aluminium
6	Screw	2	Brass CW614N
7	Washer	2	NBR
8	Body	1	Chrome-plated brass CB753S
9	Screw	2	Zinc-plated steel C4C
10	Handle	2	Chrome-plated ABS
11	Clip	2	Varnished ABS

225 Horizontal washing machine valve, heavy pattern



SIZE	PRESSURE	CODE	PACKING
1/2" (DN 15)	16bar/232psi	2250012	12/156

CERTIFICATIONS

TECHNICAL SPECIFICATIONS

Available size: 1/2”x3/4”.
Male thread for washing machine.
Body in chrome-plated brass.
Minimum and maximum working temperatures: 0°C, 80°C.
Threads: ISO 228 (equivalent to DIN EN ISO 228 and BS EN ISO 228).

OVERALL DIMENSIONS

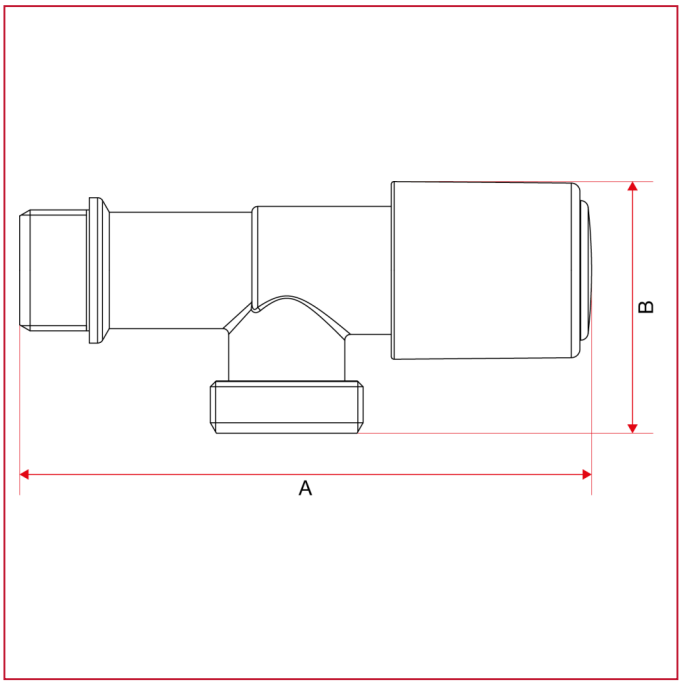

	1/2"
DN	15
A	98,5
B	43,3
Kg/cm2 bar	16
LBS - psi	232

MATERIALS

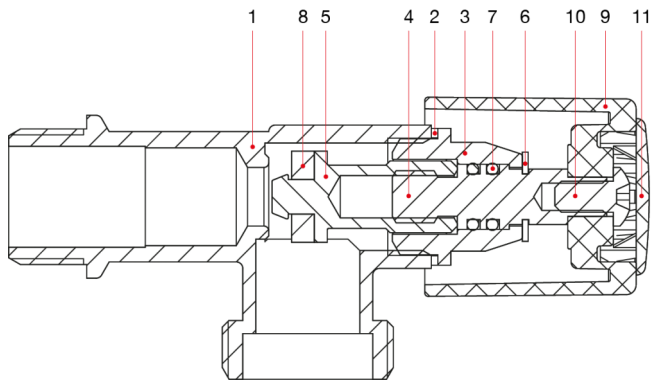

POS.	DESCRIPTION	N.	MATERIAL
1	Body	1	Chrome-plated brass CW617N
2	Washer	1	Aluminium
3	Cap	1	Brass CW614N
4	Pin	1	Brass CW614N
5	Screw	1	Brass CW614N
6	Ring	1	Stainless steel AISI 302
7	O-ring	2	NBR
8	Washer	1	NBR
9	Handle	1	Chrome-plated ABS
10	Screw	1	Zinc-plated steel C4C
11	Clip	1	Varnished ABS

226 Horizontal washing machine valve



SIZE	PRESSURE	CODE	PACKING
1/2" (DN 15)	16bar/232psi	2260012	12/120

CERTIFICATIONS

TECHNICAL SPECIFICATIONS

Available size: 1/2”x3/4”.
Male thread for washing machine.
Body in chrome-plated brass.
Minimum and maximum working temperatures: 0°C, 80°C.
Threads: ISO 228 (equivalent to DIN EN ISO 228 and BS EN ISO 228).

OVERALL DIMENSIONS

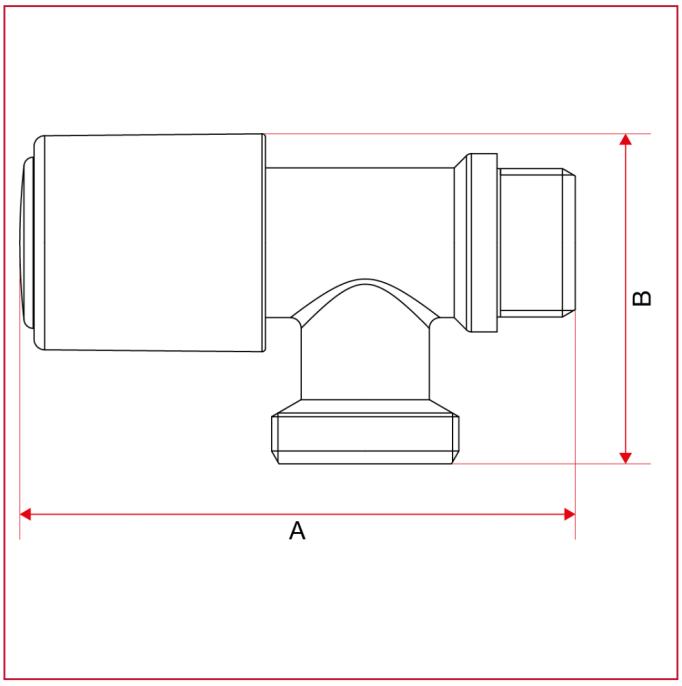

	1/2"
DN	15
A	78
B	46,3
Kg/cm2 bar	16
LBS - psi	232

MATERIALS

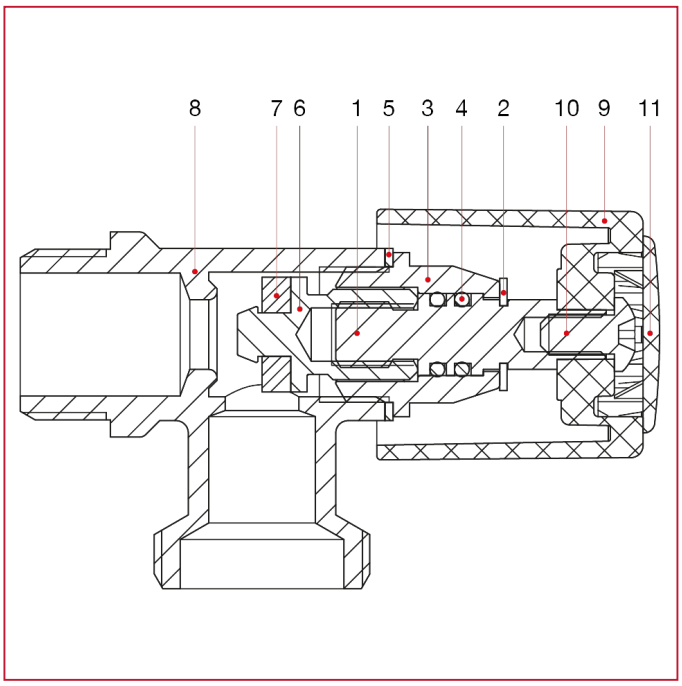

POS.	DESCRIPTION	N.	MATERIAL
1	Pin	1	Brass CW614N
2	Ring	1	Stainless steel AISI 302
3	Cap	1	Brass CW614N
4	O-ring	2	NBR
5	Washer	1	Aluminium
6	Screw	1	Brass CW614N
7	Washer	1	NBR
8	Body	1	Chrome-plated brass CW617N
9	Handle	1	Chrome-plated ABS
10	Screw	1	Zinc-plated steel C4C
11	Clip	1	Varnished ABS

228 Inclined washing machine valve



SIZE	PRESSURE	CODE	PACKING
1/2" (DN 15)	16bar/232psi	2280012	12/120

CERTIFICATIONS

TECHNICAL SPECIFICATIONS

Available size: 1/2”x3/4”.
Male thread for washing machine.
Body in chrome-plated brass.
Minimum and maximum working temperatures: 0°C, 80°C.
Threads: ISO 228 (equivalent to DIN EN ISO 228 and BS EN ISO 228).

OVERALL DIMENSIONS

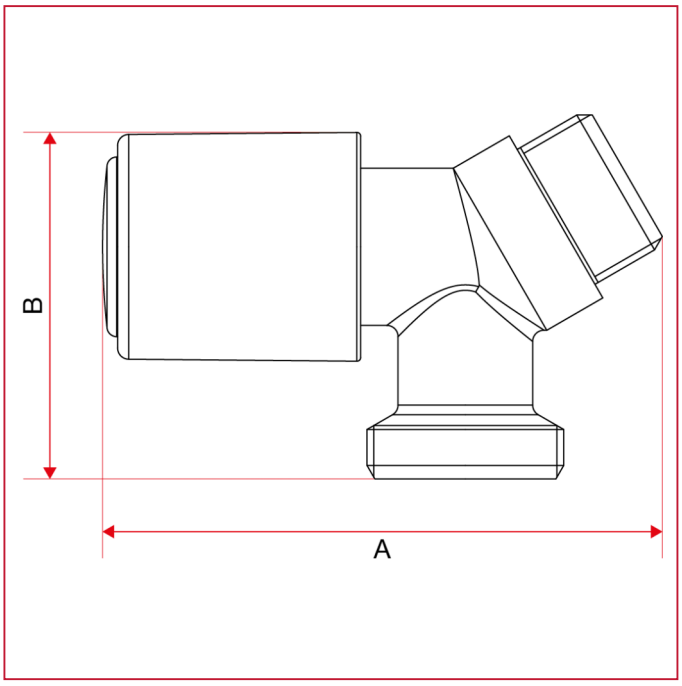

	1/2"
DN	15
A	74,8
B	46,3
Kg/cm2 bar	16
LBS - psi	232

MATERIALS

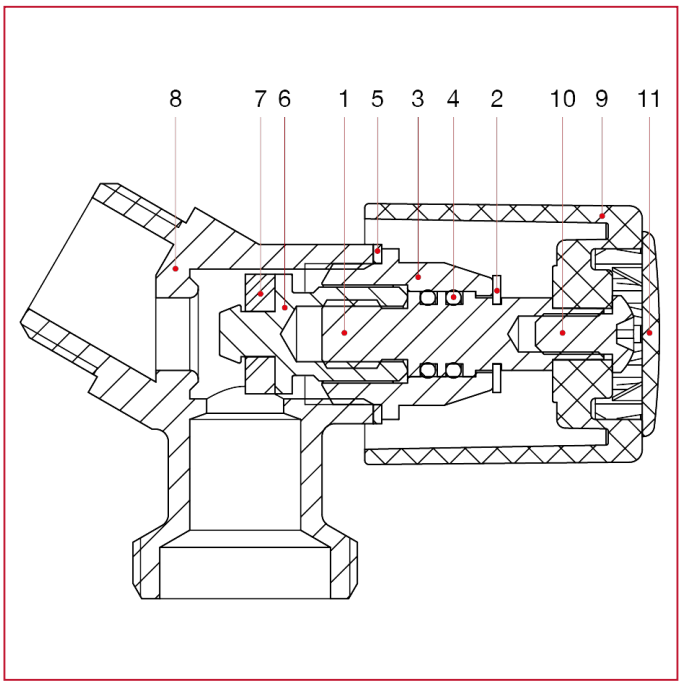

POS.	DESCRIPTION	N.	MATERIAL
1	Pin	1	Brass CW614N
2	Ring	1	Stainless steel AISI 302
3	Cap	1	Brass CW614N
4	O-ring	2	NBR
5	Washer	1	Aluminium
6	Screw	1	Brass CW614N
7	Washer	1	NBR
8	Body	1	Chrome-plated brass CW617N
9	Handle	1	Chrome-plated ABS
10	Screw	1	Zinc-plated steel C4C
11	Clip	1	Varnished ABS

230 One-piece spacer for faucets



SIZE	PRESSURE	CODE	PACKING
3/4" (DN 20)	16bar/232psi	2300034C	6/78

CERTIFICATIONS

TECHNICAL SPECIFICATIONS

Available size 3/4”x3/4”x3/4”.
Male thread for washing machine.
Body in chrome-plated brass.
Minimum and maximum working temperatures: 0°C, 80°C.
Threads: ISO 228 (equivalent to DIN EN ISO 228 and BS EN ISO 228).

OVERALL DIMENSIONS

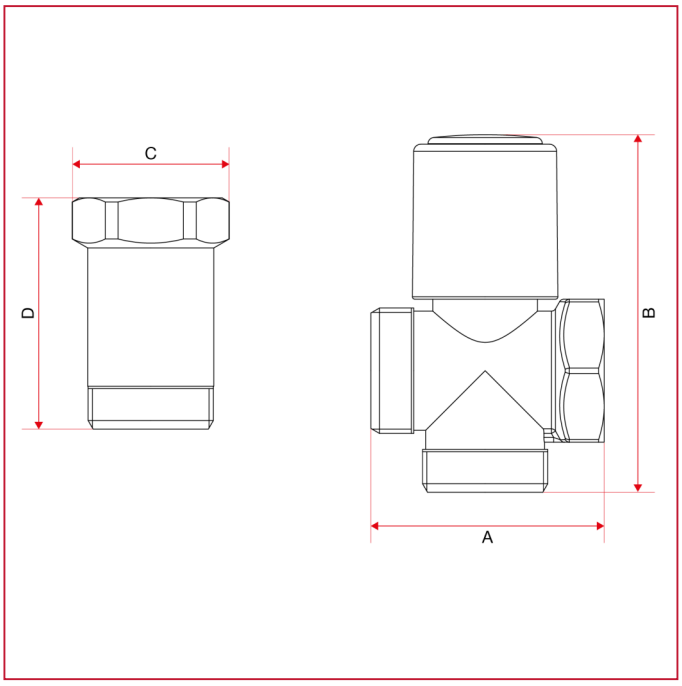

WASHING MACHINE VALVES

	3/4"
DN	15
A	49
B	75
C	33
D	48,5
Kg/cm2 bar	16
LBS - psi	232

MATERIALS

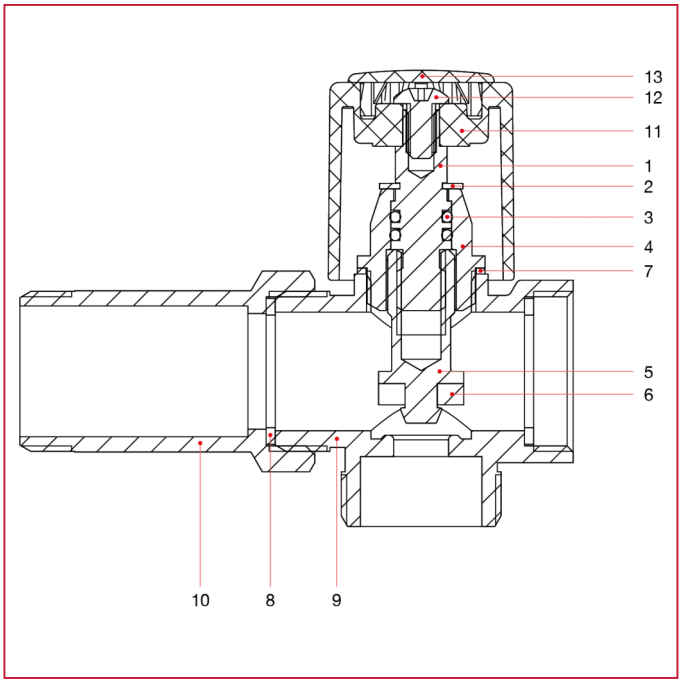

POS.	DESCRIPTION	N.	MATERIAL
1	Pin	1	Brass CW614N
2	Ring	1	Stainless steel AISI 302
3	O-ring	2	NBR
4	Cap	1	Brass CW614N
5	Screw	1	Brass CW614N
6	Washer	1	NBR
7	Washer	1	Aluminium
8	Washer	2	Red fiber
9	Body	1	Chrome-plated brass CW617N
10	Extension	1	Chrome-plated brass CW617N
11	Handle	1	Chrome-plated ABS
12	Screw	1	Zinc-plated steel C4C
13	Clip	1	Varnished ABS

240 Washing machine and dishwasher valve



SIZE	PRESSURE	CODE	PACKING
1/2" (DN 15)	16bar/232psi	2400012U	6/78

CERTIFICATIONS

TECHNICAL SPECIFICATIONS

Available size 1/2”x3/4”x3/4”.
Male thread for washing machine/dishwasher.
Body in chrome-plated brass.
Minimum and maximum working temperatures: 0°C, 80°C.
Threads: ISO 228 (equivalent to DIN EN ISO 228 and BS EN ISO 228).

OVERALL DIMENSIONS

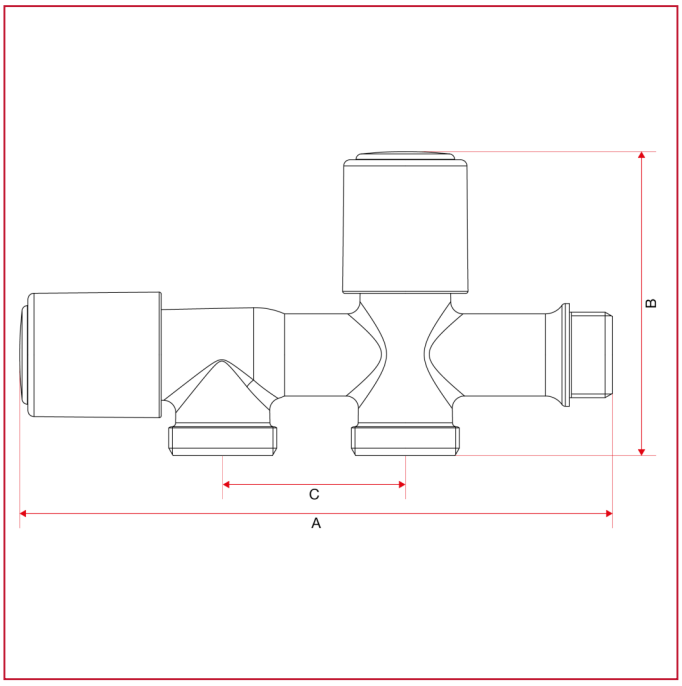

	1/2"
DN	15
A	144,5
B	74
C	44,5
Kg/cm2 bar	16
LBS - psi	232

MATERIALS

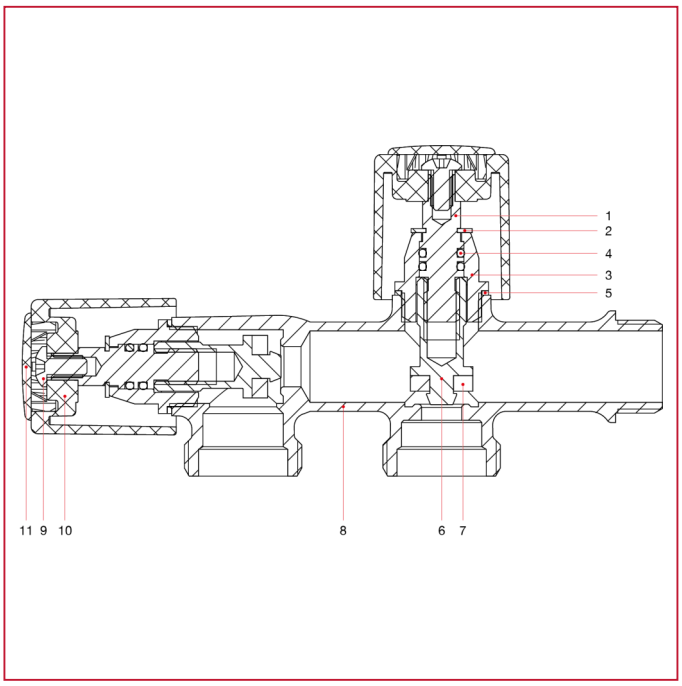

POS.	DESCRIPTION	N.	MATERIAL
1	Pin	2	Brass CW614N
2	Ring	2	Stainless steel AISI 302
3	Cap	2	Brass CW614N
4	O-ring	4	NBR
5	Washer	2	Aluminium
6	Screw	2	Brass CW614N
7	Washer	2	NBR
8	Body	1	Chrome-plated brass CB753S
9	Screw	2	Zinc-plated steel C4C
10	Handle	2	Chrome-plated ABS
11	Clip	2	Varnished ABS

250 Washing machine valve



SIZE	PRESSURE	CODE	PACKING
1/2" (DN 15)	16bar/232psi	2500012	12/156

CERTIFICATIONS

TECHNICAL SPECIFICATIONS

Available size 1/2”x3/4”.
Male thread for washing machine.
Body in chrome-plated brass.
Minimum and maximum working temperatures: 0°C, 80°C.
Threads: ISO 228 (equivalent to DIN EN ISO 228 and BS EN ISO 228).

OVERALL DIMENSIONS

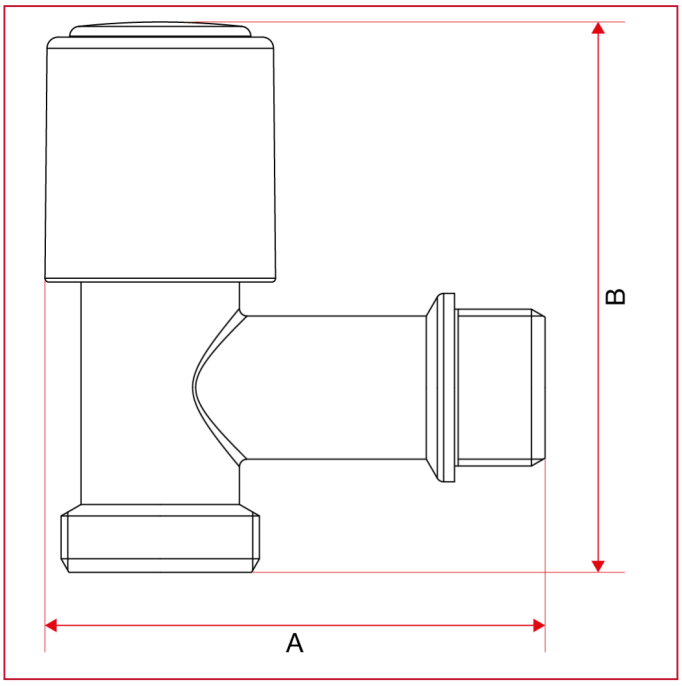

	1/2"
DN	15
A	66,3
B	73
Kg/cm2 bar	16
LBS - psi	232

MATERIALS

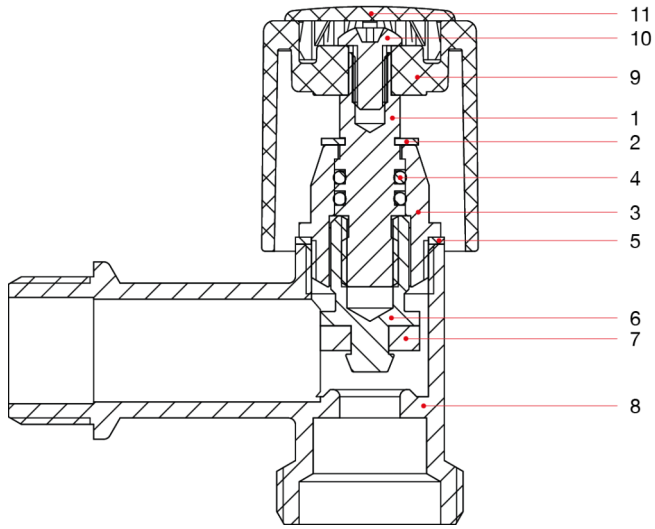

POS.	DESCRIPTION	N.	MATERIAL
1	Pin	1	Brass CW614N
2	Ring	1	Stainless steel AISI 302
3	Cap	1	Brass CW614N
4	O-ring	2	NBR
5	Washer	1	Aluminium
6	Screw	1	Brass CW614N
7	Washer	1	NBR
8	Body	1	Chrome-plated brass CW617N
9	Handle	1	Chrome-plated ABS
10	Screw	1	Zinc-plated steel C4C
11	Clip	1	Varnished ABS

WASHING MACHINE VALVES

255 3-way washing machine valve



SIZE	PRESSURE	CODE	PACKING
1/2" (DN 15)	16bar/232psi	2550012	10/100

CERTIFICATIONS

TECHNICAL SPECIFICATIONS

Available size 1/2”x3/4”.
Male thread for washing machine.
Body in chrome-plated brass.
Minimum and maximum working temperatures: 0°C, 80°C.
Threads: ISO 228 (equivalent to DIN EN ISO 228 and BS EN ISO 228).

OVERALL DIMENSIONS

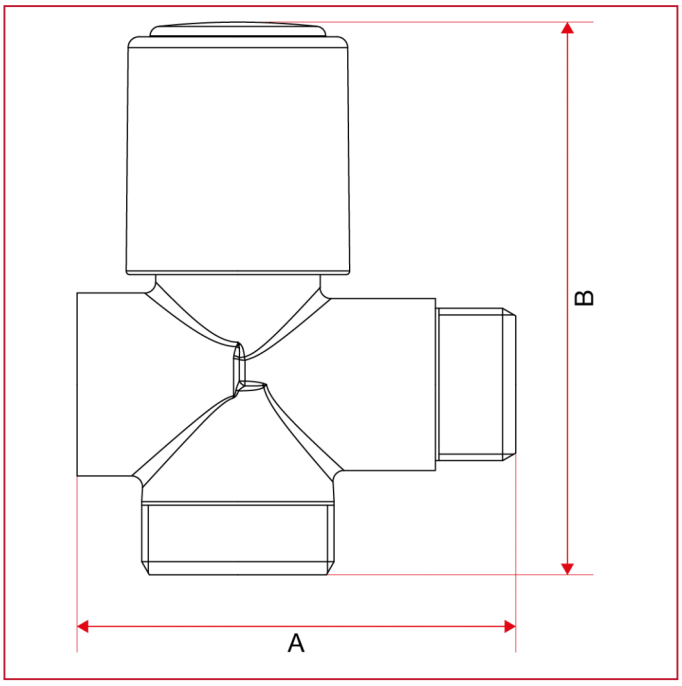

	1/2"
DN	15
A	60
B	75,5
Kg/cm2 bar	16
LBS - psi	232

MATERIALS

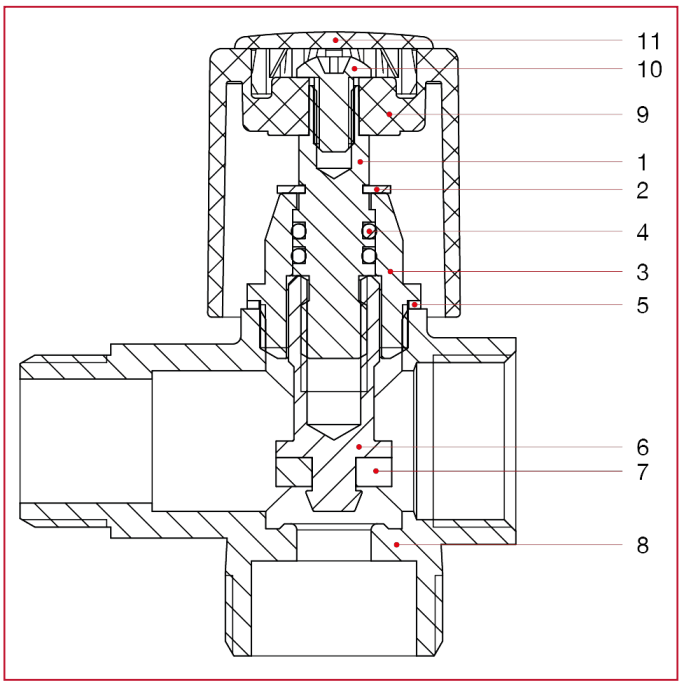

POS.	DESCRIPTION	N.	MATERIAL
1	Pin	1	Brass CW614N
2	Ring	1	Stainless steel AISI 302
3	Cap	1	Brass CW614N
4	O-ring	2	NBR
5	Washer	1	Aluminium
6	Screw	1	Brass CW614N
7	Washer	1	NBR
8	Body	1	Chrome-plated brass CW617N
9	Handle	1	Chrome-plated ABS
10	Screw	1	Zinc-plated steel C4C
11	Clip	1	Varnished ABS

390 Drain trap for washing machines



SIZE	PRESSURE	CODE	PACKING
3/4" (DN 20)	16bar/232psi	3900034	6/72

CERTIFICATIONS

TECHNICAL SPECIFICATIONS

Body in chrome-plated brass.
Cover plate in stainless steel.
Spring: stainless steel.
Minimum and maximum working temperatures: 0°C, 80°C.

OVERALL DIMENSIONS

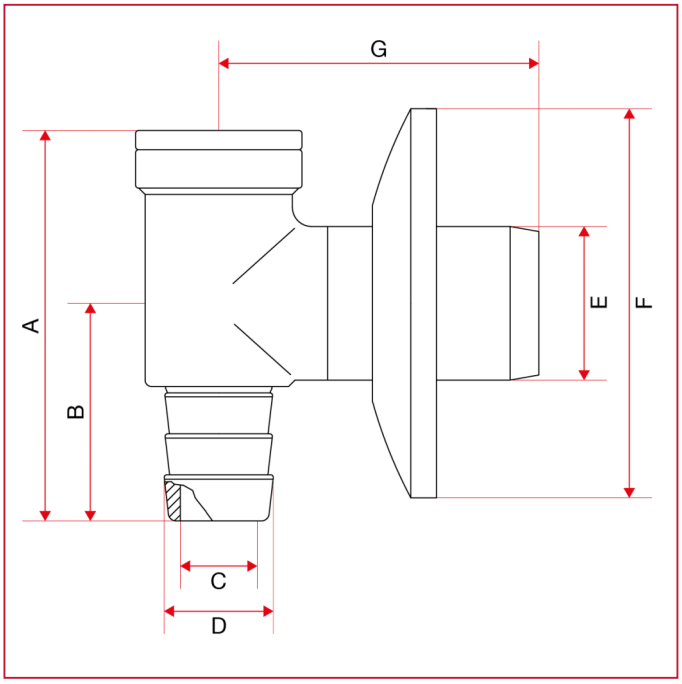

WASHING MACHINE VALVES

	3/4"
A	89
B	46
C	17,5
D	22
E	32
F	80
G	68
Kg/cm2 bar	16
LBS - psi	232

MATERIALS

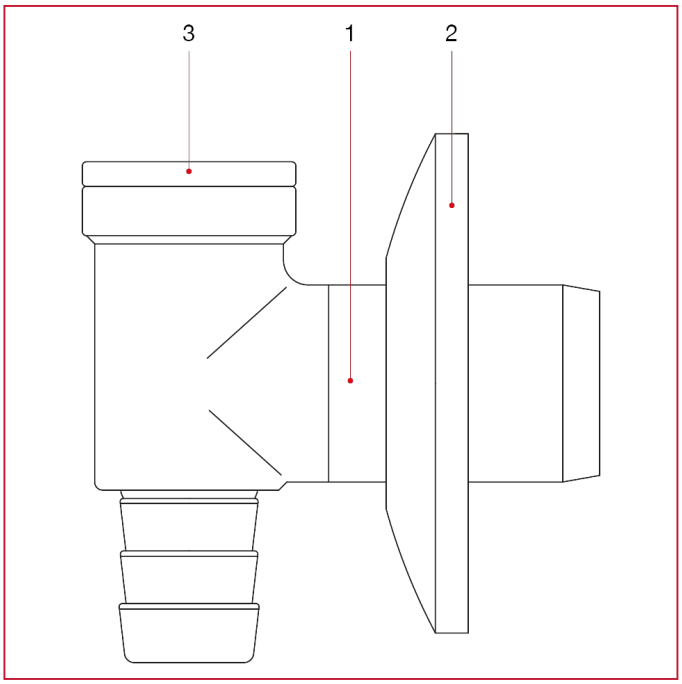

POS.	DESCRIPTION	N.	MATERIAL
1	Body	1	Chrome-plated brass CW617N
2	Cover-plate	1	Stainless steel
3	Cap	1	Chrome-plated brass CW614N
-	4 hole cap	1	POM
-	Spring	1	Stainless steel
-	O-ring	1	NBR

391 Washing machine ball valve



SIZE	PRESSURE	CODE	PACKING
1/2" (DN 15)	16bar/232psi	3910012	12/192

CERTIFICATIONS

TECHNICAL SPECIFICATIONS

Metal handle.
Available size: 1/2”x1/2”.
Male/male threads.
Body in nickel-plated brass.
Minimum and maximum working temperatures: 0°C, 110°C in absence of steam.
Threads: ISO 228 (equivalent to DIN EN ISO 228 and BS EN ISO 228).

OVERALL DIMENSIONS

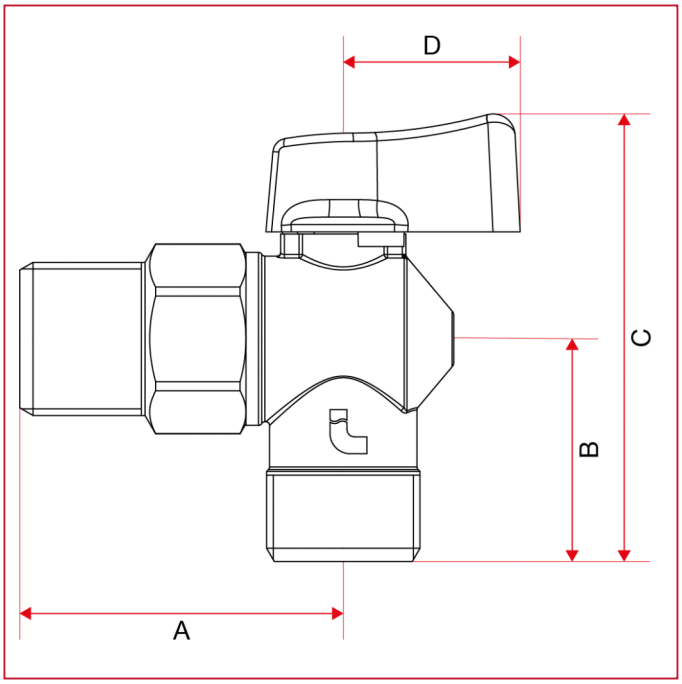

WASHING MACHINE VALVES

	1/2"
DN	15
A	44
B	30
C	61
D	24
Kg/cm2 bar	16
LBS - psi	232

MATERIALS

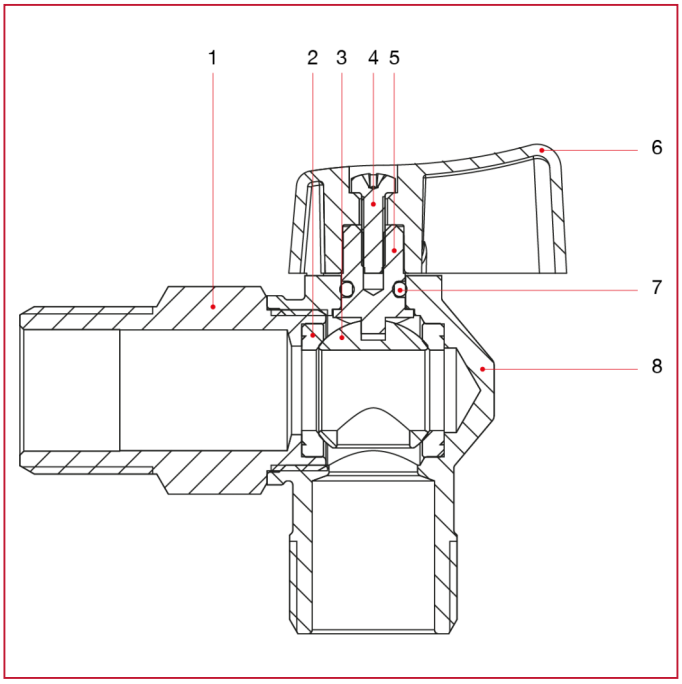

POS.	DESCRIPTION	N.	MATERIAL
1	End adapter	1	Nickel-plated brass CW617N
2	Seat	2	P.T.F.E.
3	Ball	1	Chrome-plated brass CW614N
4	Screw	1	Zinc-plated steel C10C
5	Stem	1	Brass CW614N
6	Handle	1	Zama
7	O-ring	1	NBR
8	Body	1	Nickel-plated brass CW617N

392 Washing machine ball valve

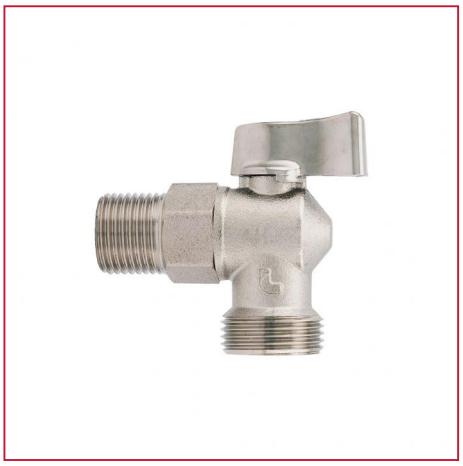

SIZE	PRESSURE	CODE	PACKING
1/2" (DN 15)	16bar/232psi	3920012	10/160

CERTIFICATIONS

TECHNICAL SPECIFICATIONS

Metal handle.
Available size: 1/2”x3/4”.
Male/male threads.
Body in nickel-plated brass.
Minimum and maximum working temperatures: 0°C, 110°C in absence of steam.
Threads: ISO 228 (equivalent to DIN EN ISO 228 and BS EN ISO 228).
Available also with NPT thread.

OVERALL DIMENSIONS

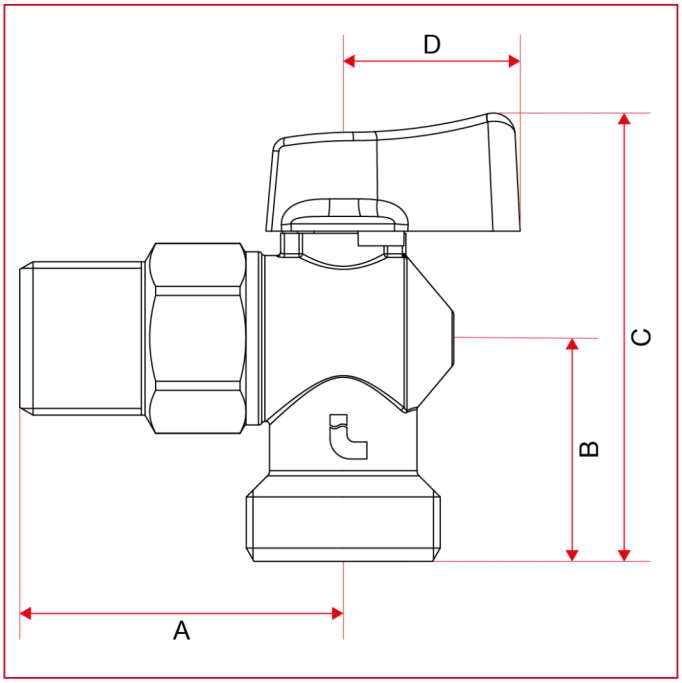

WASHING MACHINE VALVES

	1/2"
DN	15
A	44
B	30
C	61
D	24
Kg/cm2 bar	16
LBS - psi	232

MATERIALS

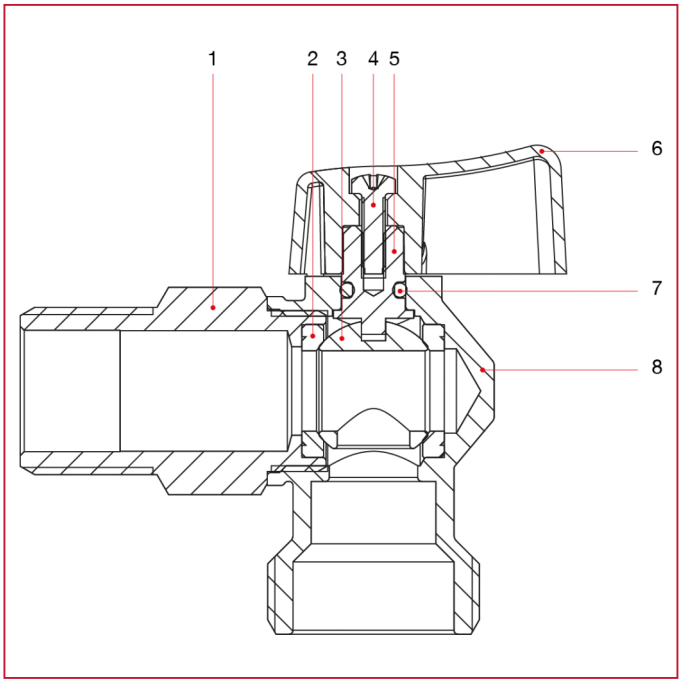

POS.	DESCRIPTION	N.	MATERIAL
1	End adapter	1	Nickel-plated brass CW617N
2	Seat	2	P.T.F.E.
3	Ball	1	Chrome-plated brass CW614N
4	Screw	1	Zinc-plated steel C10C
5	Stem	1	Brass CW614N
6	Handle	1	Zama
7	O-ring	1	NBR
8	Body	1	Nickel-plated brass CW617N

488 Angle valve



SIZE	PRESSURE	CODE	PACKING
1/2" (DN 15)	16bar/232psi	4880012	10/240

CERTIFICATIONS

TECHNICAL SPECIFICATIONS

Available size: 1/2”x1/2”.
Male thread.
Body in chrome-plated brass.
Handle in chrome-plated ABS.
Minimum and maximum working temperatures: 0°C, 80°C.
Threads: ISO 228 (equivalent to DIN EN ISO 228 and BS EN ISO 228).

OVERALL DIMENSIONS

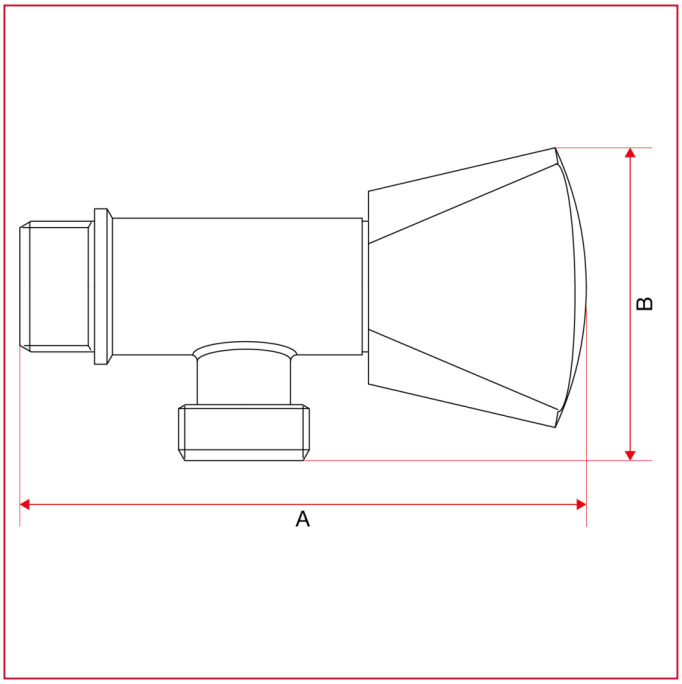

	1/2"
A	82
B	47
Kg/cm2 bar	16
LBS - psi	232

MATERIALS

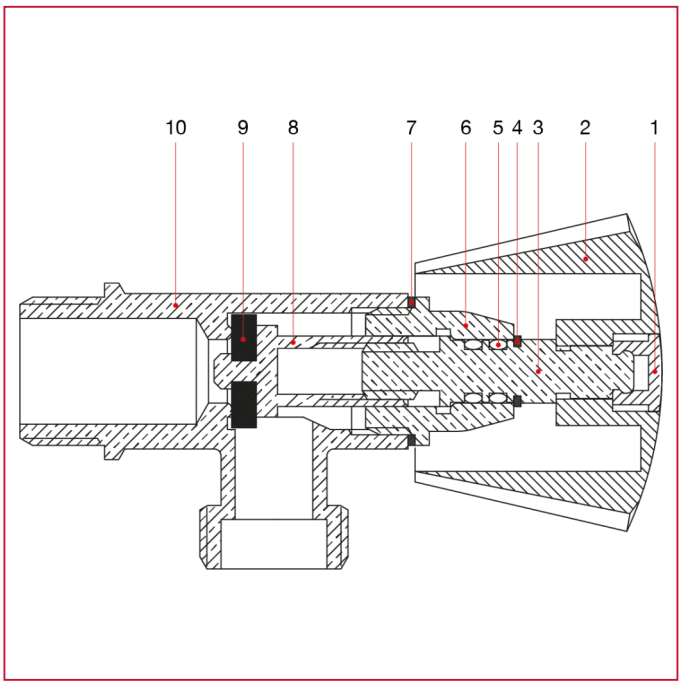

POS.	DESCRIPTION	N.	MATERIAL
1	Handle clip	1	ABS
2	Handle	1	Chrome-plated ABS
3	Bonnet	1	Brass CW617N
4	Ring	1	Stainless steel
5	O-ring	2	NBR
6	Cap	1	Brass CW617N
7	Washer	1	Aluminium
8	Adjusting screw	1	Brass CW617N
9	Washer	1	NBR
10	Body	1	Chrome-plated brass CW617N

706 Washing machine ball valve



SIZE	PRESSURE	CODE	PACKING
1/2" (DN 15)	8bar/116psi	7060012	10/180

CERTIFICATIONS

TECHNICAL SPECIFICATIONS

Available size: 1/2”x3/4”.
Male/male threads.
Body in chrome-plated brass.
Metal handle.
Cover plate in stainless steel.
Minimum and maximum working temperatures: 0°C, 80°C.
Threads: ISO 228 (equivalent to DIN EN ISO 228 and BS EN ISO 228).

OVERALL DIMENSIONS

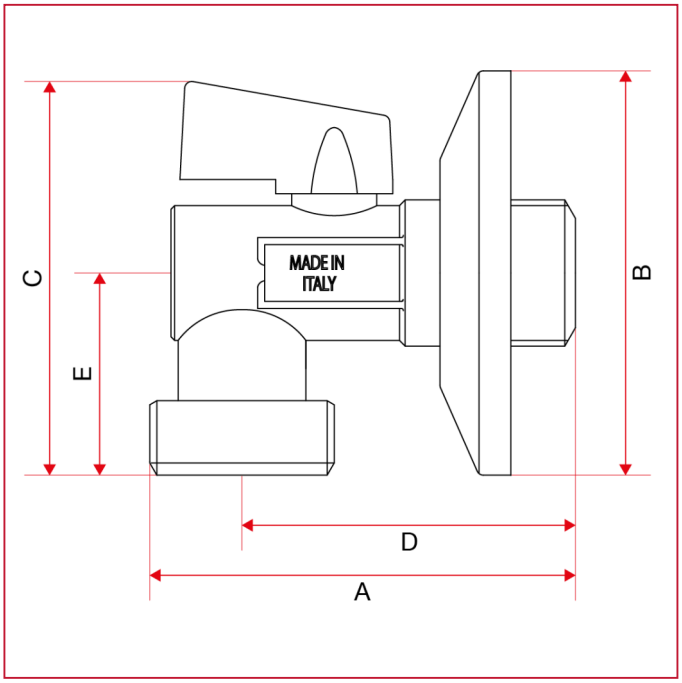

WASHING MACHINE VALVES

	1/2"
A	60,2
B	55
C	56,3
D	47
E	28,5
Kg/cm2 bar	8
LBS - psi	116

MATERIALS

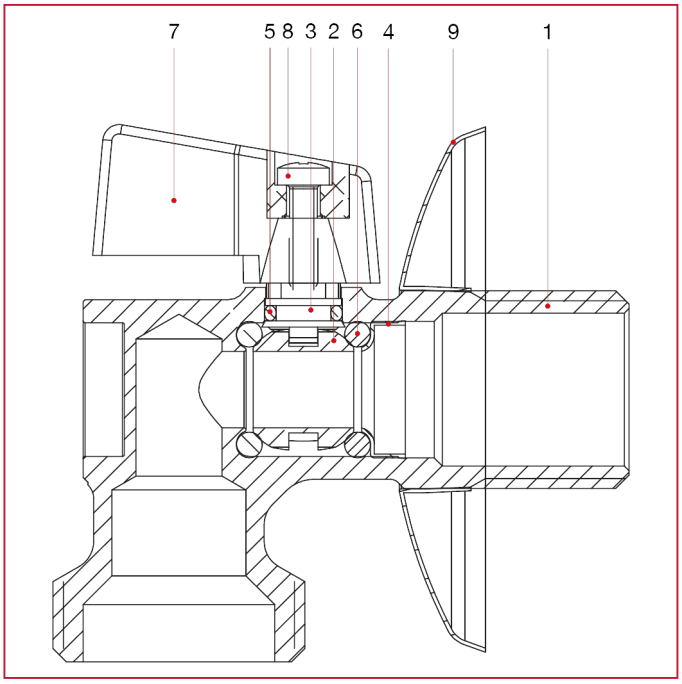

POS.	DESCRIPTION	N.	MATERIAL
1	Body	1	Chrome-plated brass CW617N
2	Screw	1	Zinc-plated steel
3	Lever handle	1	Zama
4	Stem	1	Brass CW617N
5	O-ring	1	NBR
6	O-ring	2	NBR
7	Ball	1	Chrome-plated brass CW617N
8	Pressure ring	1	Brass CW508L
9	Cover plate	1	Stainless steel AISI 430

ITAP S.p.A.
Via Ruca 19
25065 Lumezzane
Brescia (ITALY)
Tel 030 8927011
Fax 030 8921990
www.itap.it - info@itap.it

We reserve the right to make improvements and changes to the products described herein and to the relative technical data, at any time and without forewarning.

rev. 20210915