Innovation Technology And People

TECHNICAL CATALOGUE

Pressure reducing valves EUROPRESS



THE COMPANY

ITAP SpA, founded in Lumezzane (Brescia) in 1972, is currently one of the leading production companies in Italy of **valves, fittings and distribution manifolds** for plumbing and heating systems.

Thanks to fully automated production processes, with 72 tooling machines and 51 assembly lines, we are able to produce 200,000 pieces per day.

Our innate pursuit for innovation and observance of technical regulations is supported by the company certification ISO 9001. The company has always considered its focus on quality as the main tool to obtain significant business results: today ITAP SpA is proud to offer products bearing the approval of numerous international certifying bodies.







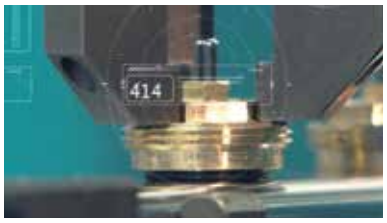









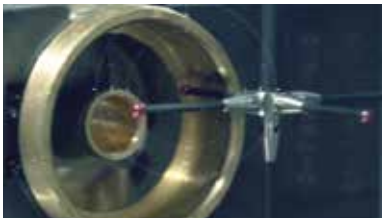





ITAP products have obtained approvals by more than 30 certification bodies from all over the world.

TECHNICAL CATALOGUE



GENERAL NOTES:

Suitable for domestic water services, heating and air-conditioning plants, compressed air systems.

It can be installed in any position: vertical, horizontal, oblique.

143 EUROPRESS pressure reducing valve



SIZE	PRESSURE	CODE	PACKING
1/2" (DN 15)	25bar/362.5psi	1430012	1/34
3/4" (DN 20)	25bar/362.5psi	1430034	1/34
1" (DN 25)	25bar/362.5psi	1430100	1/18
1"1/4 (DN 32)	25bar/362.5psi	1430114	1/9
1"1/2 (DN 40)	25bar/362.5psi	1430112	1/9
2" (DN 50)	25bar/362.5psi	1430200	1/8
2"1/2 (DN 65)	25bar/362.5psi	1430212	1/6
3" (DN 80)	25bar/362.5psi	1430300	1/4
4" (DN 100)	25bar/362.5psi	1430400	1/3

CERTIFICATIONS

143

143: 1/2" - 3/4"

TECHNICAL SPECIFICATIONS:

Compensated piston operation.
Female/female threads.
Body in nickel-plated brass.
Minimum and maximum working temperatures: 0°C, 80°C.
Maximum inlet pressure: 25bar.
Outlet pressure can be adjusted:
1/2" - 3/4" - 1" between 1 and 5,5 bar;
1"1/4" through 4" between 1 and 6 bar.
Factory preadjustment 3 bar.
Outlet pressure gauge connection 1/4" on both sides.
Threads ISO228 (equivalent to DIN EN ISO 228 and BS EN ISO 228).
Available also with NPT thread in the sizes 2"1/2 - 3" - 4".

OVERALL DIMENSIONS

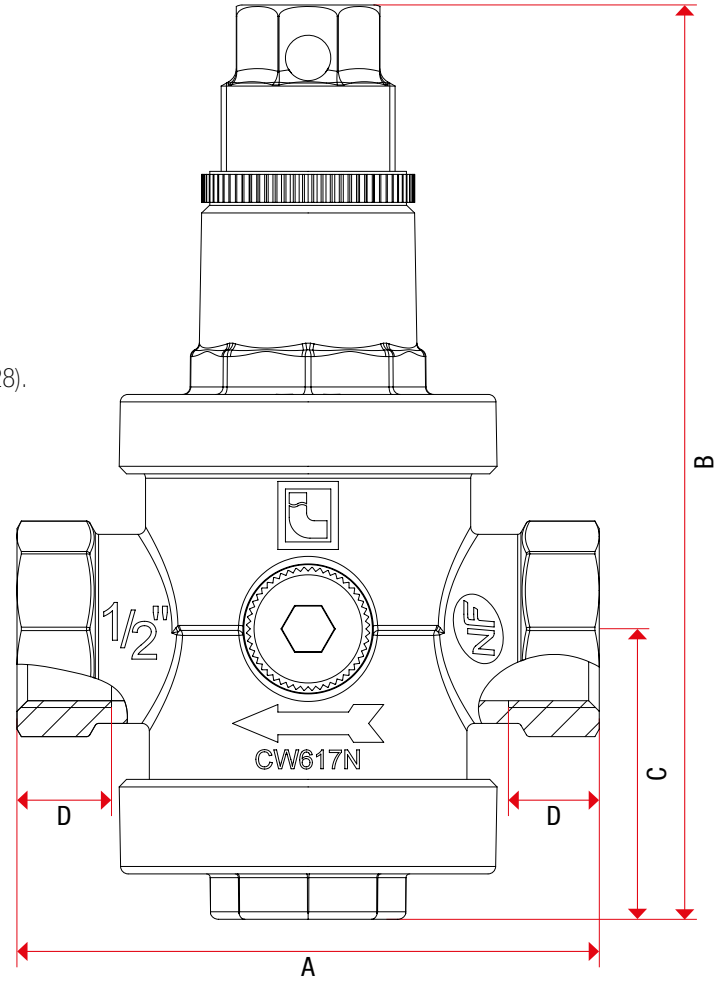

	1/2"	3/4"	1"	1"1/4	1"1/2	2"	2"1/2	3"	4"
DN	15	20	25	32	40	50	65	80	100
A	77	85	91	118	126	142	147	179	188
B	127	124	159	220	220	248	267	290	331
C	38,5	38,5	56	68	68	86	87,5	96,5	103,5
D	12	12	13	18	18	20	20	22	23,5
Kg/cm² bar	25	25	25	25	25	25	25	25	25
LBS - psi	362,5	362,5	362,5	362,5	362,5	362,5	362,5	362,5	362,5

MATERIALS From 1/2" to 1"

POS.	DESCRIPTION	N.	MATERIAL
1	Body	1	Nickel-plated brass CW617N
2	Seat	1	Stainless steel AISI 303
3	Bottom plug	1	Nickel-plated brass CW617N
4	O-ring	1	EPDM
5	Shutter	1	Brass CW614N
6	Flat seat washer	1	EPDM
7	Stem	1	Brass CW614N
8	O-ring	1	EPDM
9	O-ring	1	EPDM
10	Diaphragm	1	Brass CW617N
11	Upper cover	1	Nickel-plated brass CW617N
12	Spring	1	EN 10270-1 DH
13	Nut	1	Polymer
14	Spring regulator	1	Nickel-plated brass CW617N
15	Plug	2	Polymer
16	O-ring	2	EPDM

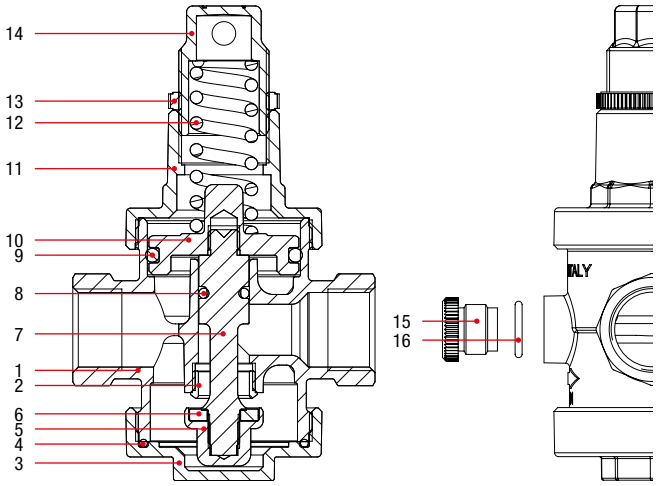

MATERIALS From 1"1/4 to 4"

POS.	DESCRIPTION	N.	MATERIAL
1	Body	1	Nickel-plated brass CW617N
2	Bottom plug	1	Nickel-plated brass CW617N
3	O-ring	1	NBR
4	O-ring	1	NBR
5	Shutter	1	Brass CW614N
6	Stop washer	1	Brass CW614N
7	Flat seat washer	1	NBR
8	Stem	1	Stainless steel AISI 303
9	Seat	1	Stainless steel AISI 303
10	O-ring	1	NBR
11	Fastening ring	1	Brass CW625N
12	O-ring	1	NBR
13	Diaphragm	1	Brass CW617N
14	Upper cover	1	Nickel-plated brass CW617N
15	Spring	1	EN 10270-1 SM/SH
16	Nut	1	Polymer
17	Spring regulator	1	Nickel-plated brass CW617N
18	Plug	2	Polymer
19	O-ring	2	EPDM

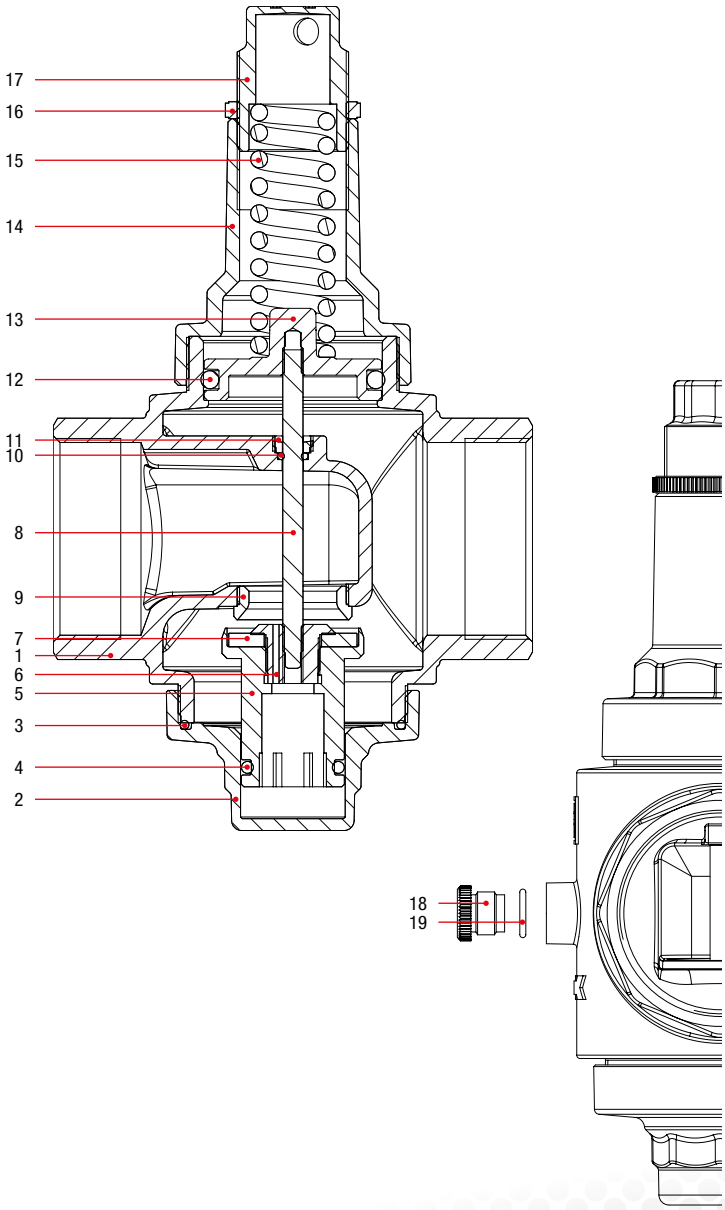

PRESSURE REDUCING VALVES EUROPRESS

143MM EUROPRESS pressure reducing valve, with union connection



SIZE	PRESSURE	CODE	PACKING
1/2" (DN 15)	25bar/362.5psi	1430012MM	1/34
3/4" (DN 20)	25bar/362.5psi	1430034MM	1/24
1" (DN 25)	25bar/362.5psi	1430100MM	1/18
1"1/4 (DN 32)	25bar/362.5psi	1430114MM	1/9
1"1/2 (DN 40)	25bar/362.5psi	1430112MM	1/9
2" (DN 50)	25bar/362.5psi	1430200MM	1/6

CERTIFICATIONS

143MM | 143MM: 1/2" - 3/4"

TECHNICAL SPECIFICATIONS:

Compensated piston operation.
Union connections.
Body in nickel-plated brass.
Minimum and maximum working temperatures: 0°C, 80°C.
Maximum inlet pressure: 25bar.
Outlet pressure can be adjusted:
1/2" - 3/4" - 1" between 1 and 5,5 bar;
1"1/4" through 2" between 1 and 6 bar.
Factory preadjustment 3 bar.
Outlet pressure gauge connection 1/4" on both sides.
Threads ISO228 (equivalent to DIN EN ISO 228 and BS EN ISO 228).
Multi-thread model available in 1/2" size.

OVERALL DIMENSIONS

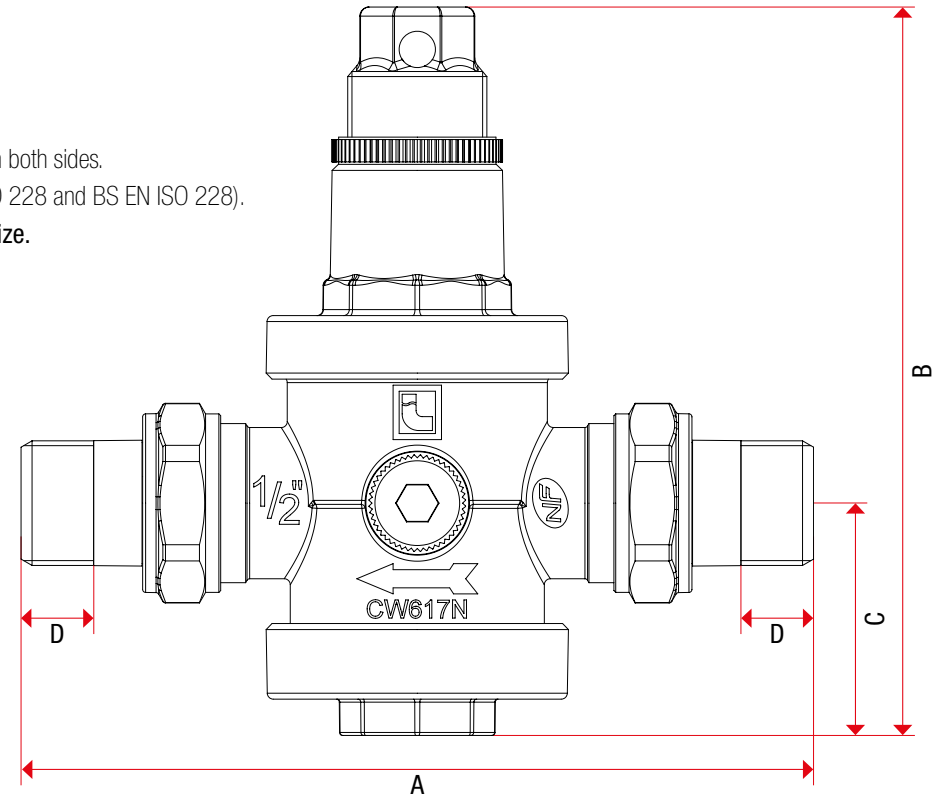

	1/2"	3/4"	1"	1"1/4	1"1/2	2"
DN	15	20	25	32	40	50
A	131	135	156	177	188	213
B	124	124	159	220	220	248
C	38,5	38,5	56	68	68	86,5
D	12	12	14	16	16	17
Kg/cm² bar	25	25	25	25	25	25
LBS - psi	362,5	362,5	362,5	362,5	362,5	362,5

MATERIALS From 1/2” to 1”

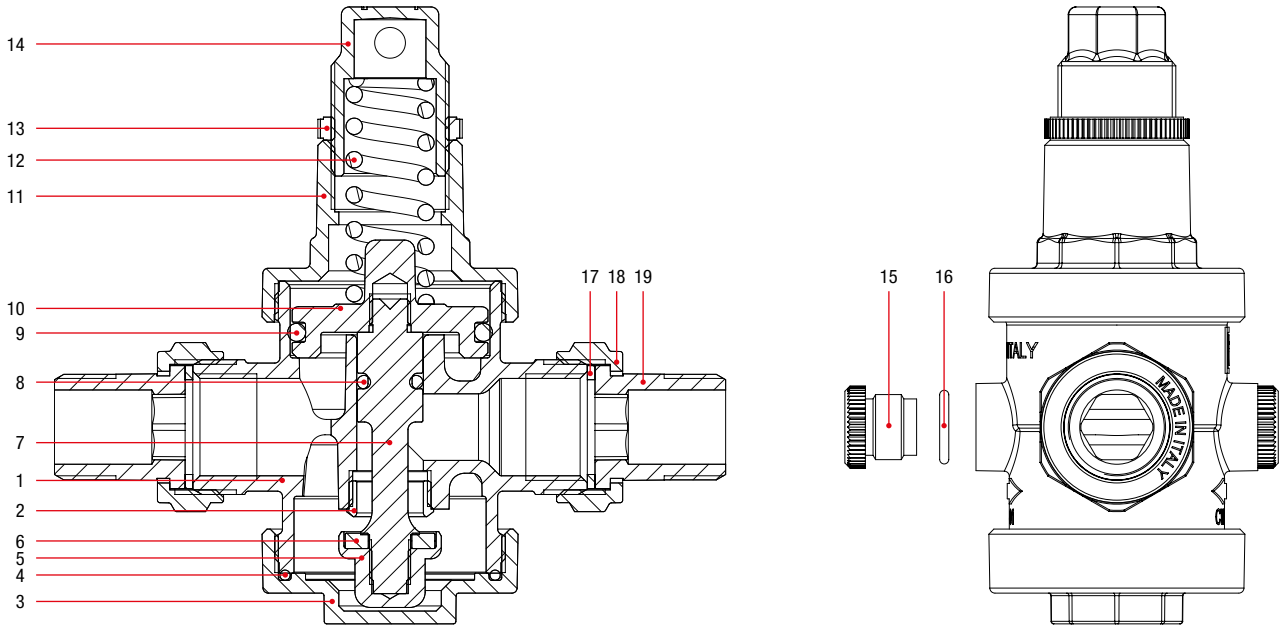

POS.	DESCRIPTION	N.	MATERIAL
1	Body	1	Nickel-plated brass CW617N
2	Seat	1	Stainless steel AISI 303
3	Bottom plug	1	Nickel-plated brass CW617N
4	O-ring	1	EPDM
5	Shutter	1	Brass CW614N
6	Flat seat washer	1	EPDM
7	Stem	1	Brass CW614N
8	O-ring	1	EPDM
9	O-ring	1	EPDM
10	Diaphragm	1	Brass CW617N
11	Upper cover	1	Nickel-plated brass CW617N
12	Spring	1	EN 10270-1 DH
13	Nut	1	Polymer
14	Spring regulator	1	Nickel-plated brass CW617N
15	Plug	2	Polymer
16	O-ring	2	EPDM
17	Flat seat washer	2	Red fiber
18	Nut	2	Nickel-plated brass CW617N
19	Fitting with flat seat	2	Nickel-plated brass CW617N

MATERIALS From 1”1/4 to 2”

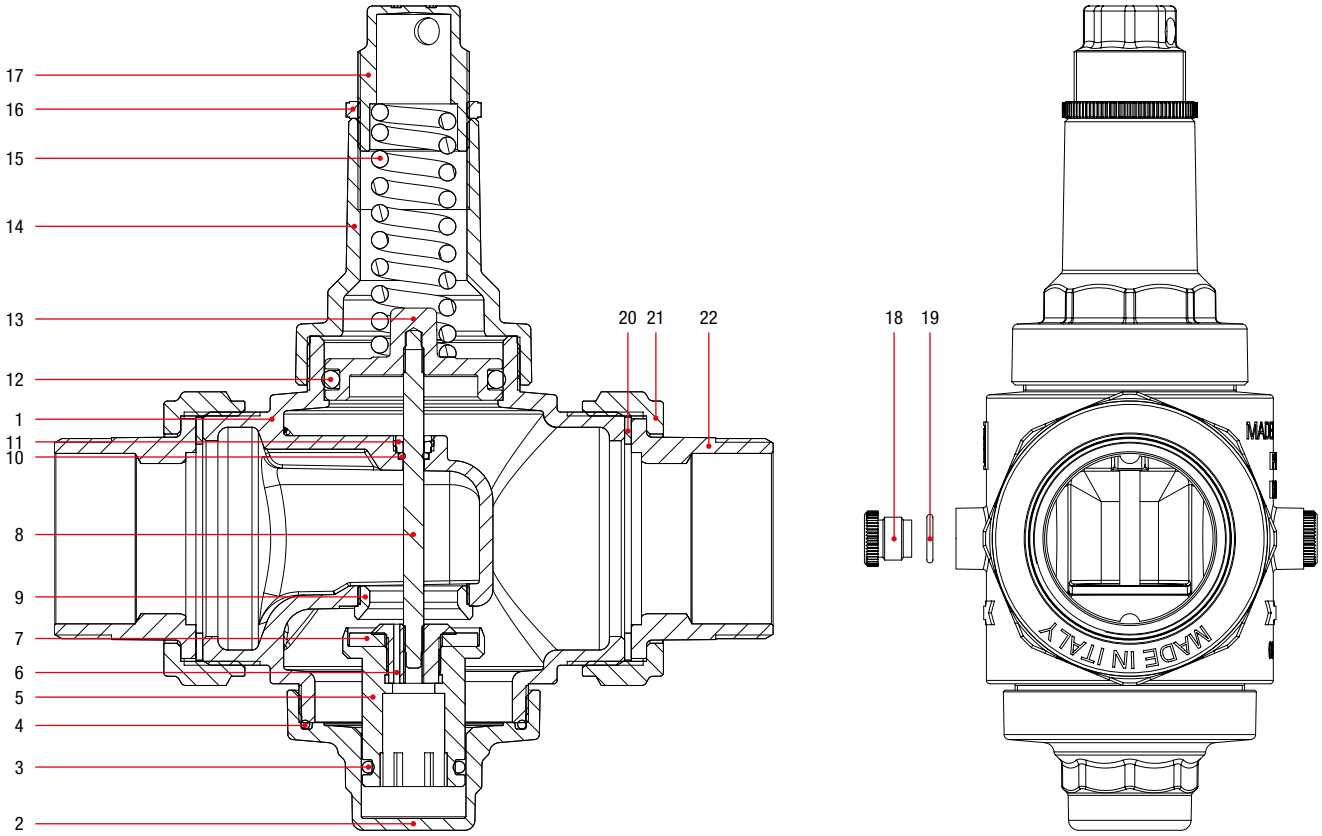

POS.	DESCRIPTION	N.	MATERIAL
1	Body	1	Nickel-plated brass CW617N
2	Bottom plug	1	Nickel-plated brass CW617N
3	O-ring	1	NBR
4	O-ring	1	NBR
5	Shutter	1	Brass CW614N
6	Stop washer	1	Brass CW614N
7	Flat seat washer	1	NBR
8	Stem	1	Stainless steel AISI 303
9	Seat	1	Stainless steel AISI 303
10	O-ring	1	NBR
11	Fastening ring	1	Brass CW625N
12	O-ring	1	NBR
13	Diaphragm	1	Brass CW617N
14	Upper cover	1	Nickel-plated brass CW617N
15	Spring	1	EN 10270-1 SM/SH
16	Nut	1	Polymer
17	Spring regulator	1	Nickel-plated brass CW617N
18	Plug	2	Polymer
19	O-ring	2	EPDM
20	Flat seat washer	2	FASIT NBR
21	Nut	2	Nickel-plated brass CW617N
22	Fitting with flat seat	2	Nickel-plated brass CW617N

THREAD COMBINATIONS FOR MULTI-THREAD MODEL (Available in 1/2” size only)

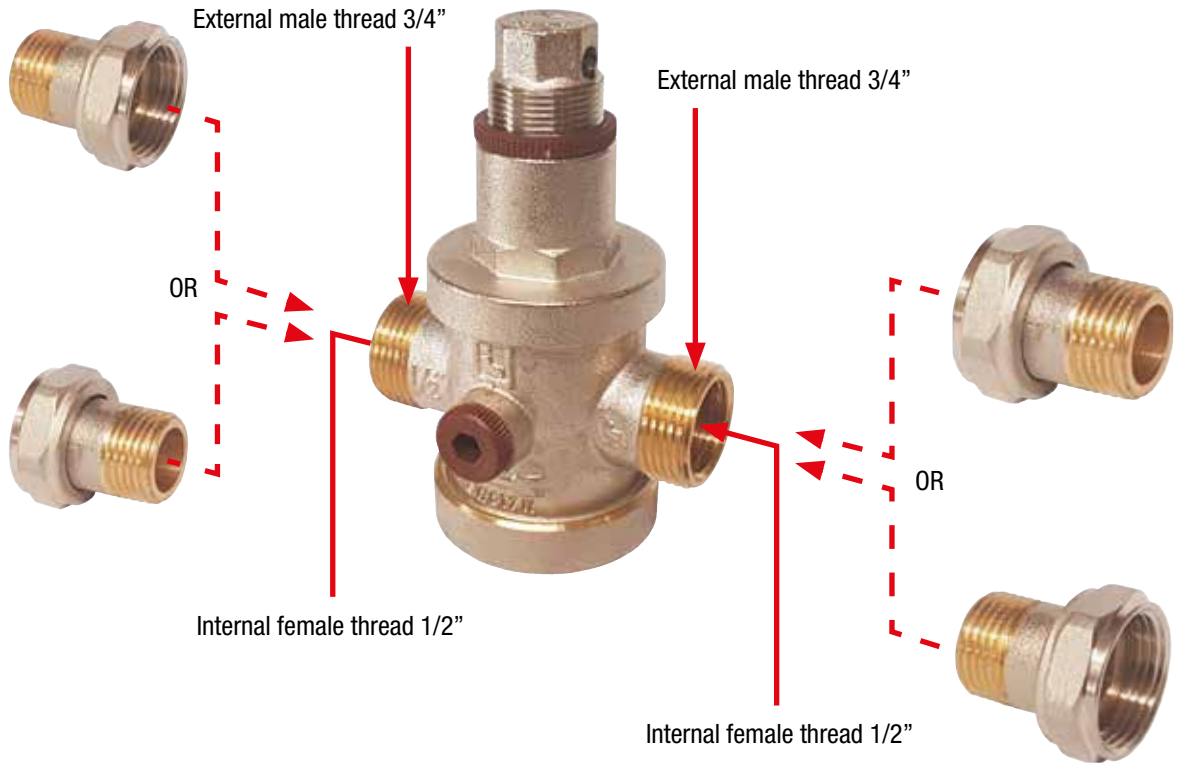

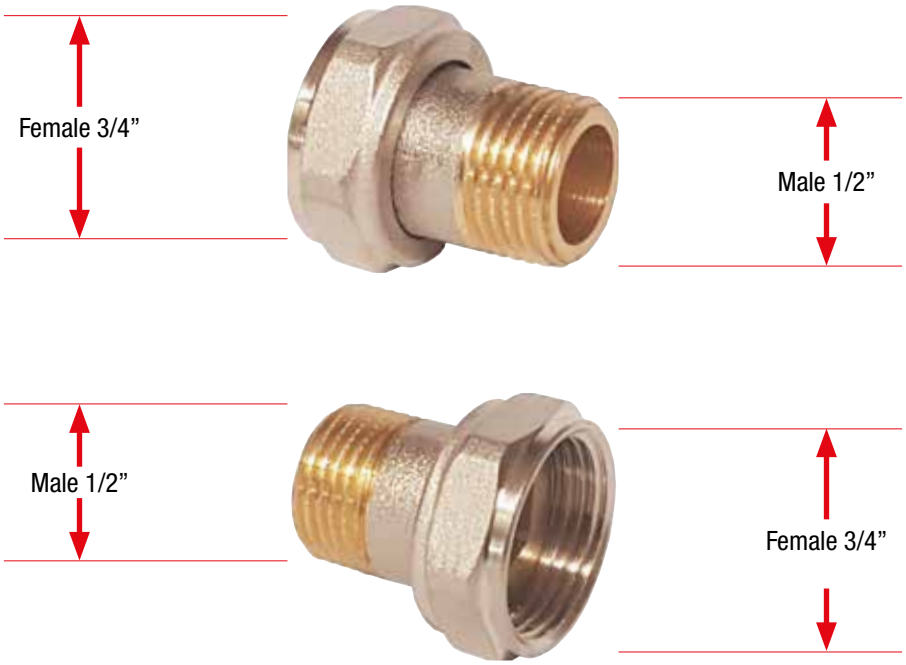

243 EUROPRESS pressure reducing valve, dezincification resistant brass



SIZE	PRESSURE	CODE	PACKING
1/2" (DN 15)	25bar/362.5psi	2430012	1/34
3/4" (DN 20)	25bar/362.5psi	2430034	1/34
1" (DN 25)	25bar/362.5psi	2430100	1/18
1"1/4 (DN 32)	25bar/362.5psi	2430114	1/9
1"1/2 (DN 40)	25bar/362.5psi	2430112	1/9
2" (DN 50)	25bar/362.5psi	2430200	1/8

CERTIFICATIONS

243: 1/2" - 3/4" - 1"

243

TECHNICAL SPECIFICATIONS:

Compensated piston operation.
Female/female threads.
Body in dezincification resistant brass.
Minimum and maximum working temperatures: 0°C, 80°C.
Maximum inlet pressure: 25bar.
Outlet pressure can be adjusted:
1/2" - 3/4" - 1" between 1 and 5,5 bar; 1"1/4" through 2" between 1 and 6 bar.
Factory preadjustment 4 bar.
Outlet pressure gauge connection 1/4" on both sides.
Threads ISO228 (equivalent to DIN EN ISO 228 and BS EN ISO 228).

OVERALL DIMENSIONS

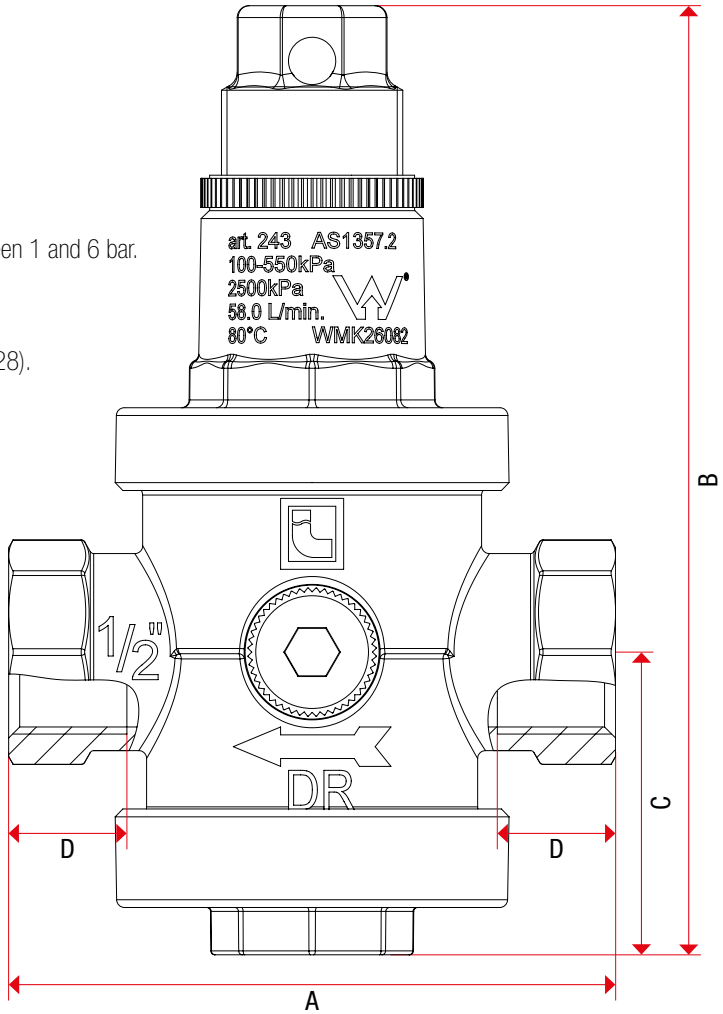

	1/2"	3/4"	1"	1"1/4	1"1/2	2"
DN	15	20	25	32	40	50
A	77	85	91	118	126	142
B	125,5	125,5	159	218	225	250
C	40	40	59	69,5	126	87
D	15	16,3	19,1	18	18	20
Kg/cm² bar	25	25	25	25	25	25
LBS - psi	362,5	362,5	362,5	362,5	362,5	362,5

MATERIALS From 1/2" to 1"

POS.	DESCRIPTION	N.	MATERIAL
1	Body	1	Brass CW625N
2	Seat	1	Stainless steel AISI 303
3	Bottom plug	1	Brass CW625N
4	O-ring	1	EPDM
5	Shutter	1	Brass CW625N
6	Flat seat washer	1	EPDM
7	Stem	1	Brass CW625N
8	O-ring	1	EPDM
9	O-ring	1	EPDM
10	Diaphragm	1	Brass CW625N
11	Upper cover	1	Brass CW617N
12	Spring	1	EN 10270-1 DH
13	Nut	1	Polymer
14	Spring regulator	1	Brass CW617N
15	Plug	2	Polymer
16	O-ring	2	EPDM

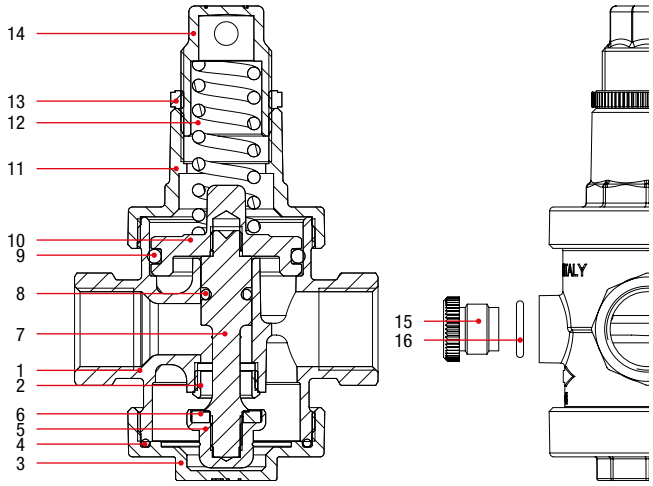

MATERIALS From 1"1/4 to 2"

POS.	DESCRIPTION	N.	MATERIAL
1	Body	1	Brass CC770S
2	Bottom plug	1	Brass CW625N
3	O-ring	1	EPDM
4	O-ring	1	NBR
5	Shutter	1	Brass CW625N
6	Stop washer	1	Brass CW625N
7	Flat seat washer	1	NBR
8	Stem	1	Stainless steel AISI 303
9	Seat	1	Stainless steel AISI 303
10	O-ring	1	NBR
11	Fastening ring	1	Brass CW625N
12	O-ring	1	NBR
13	Diaphragm	1	Brass CW625N
14	Upper cover	1	Brass CW617N
15	Spring	1	EN 10270-1 SM/SH
16	Nut	1	Polymer
17	Spring regulator	1	Brass CW617N
18	Plug	2	Polymer
19	O-ring	2	EPDM

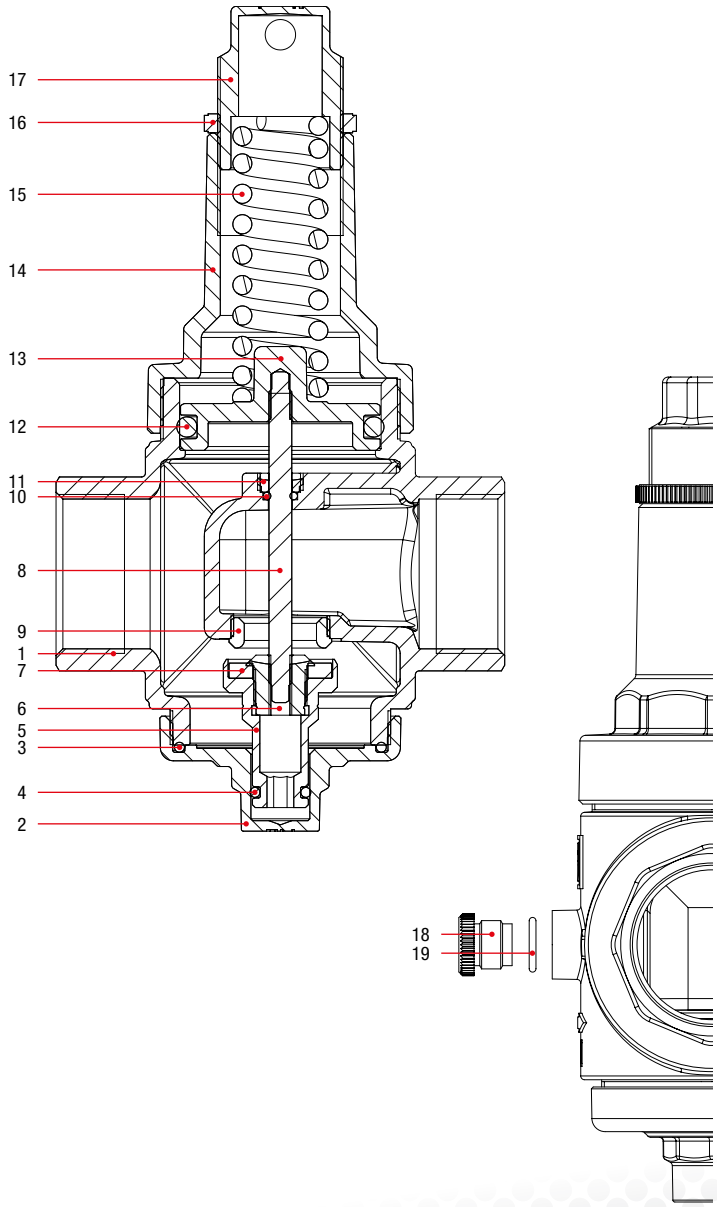

LOSS DIAGRAM Art. 143 and 143MM (With water)

Pressure drop diagram includes the loss of pressure proportional to a specific flow rate. According to the requested flow rate, it is possible to measure the water system and the pressure reducing valve correctly (it would be better to have a flow speed between 1 m/s and 2 m/s in the piping).

INSTANCE:

In case of ½" pressure reducing valve with an adjusted downstream pressure of 3 bar and a flow rate of 35 l/min, the pressure drop diagram states a loss of pressure of 0.62 bar. It means that the pressure gauge installed on the outlet way of pressure reducing valve shows a figure of 2.38 bar (= 3 bar – 0.62 bar).

Here mentioned figures refer to: upstream pressure 8 bar, downstream pressure 3 bar.
N.B. Figure about 4" are approximate.

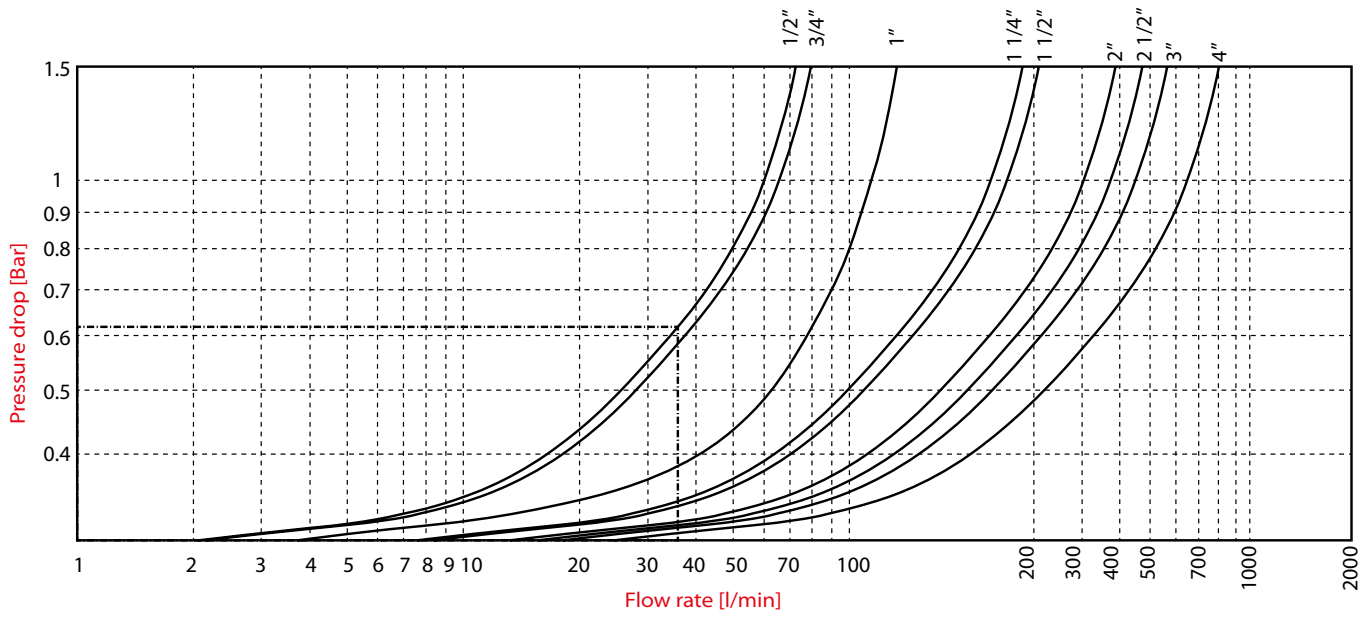

	1/2"	3/4"	1"	1"1/4	1"1/2	2"	2"1/2	3"	4"
Kv	3,6	4	6,6	9,6	10,2	18	22,8	27	39

LOSS DIAGRAM Art. 243 (With water)

Pressure drop diagram includes the loss of pressure proportional to a specific flow rate. According to the requested flow rate, it is possible to measure the water system and the pressure reducing valve correctly (it would be better to have a flow speed between 1 m/s and 2 m/s in the piping).

INSTANCE:

In case of ½" pressure reducing valve with an adjusted downstream pressure of 4 bar and a flow rate of 35 l/min, the pressure drop diagram states a loss of pressure of 0.62 bar. It means that the pressure gauge installed on the outlet way of pressure reducing valve shows a figure of 3.38 bar (= 4 bar – 0.62 bar).

Here mentioned figures refer to: upstream pressure 8 bar, downstream pressure 3,5 bar.

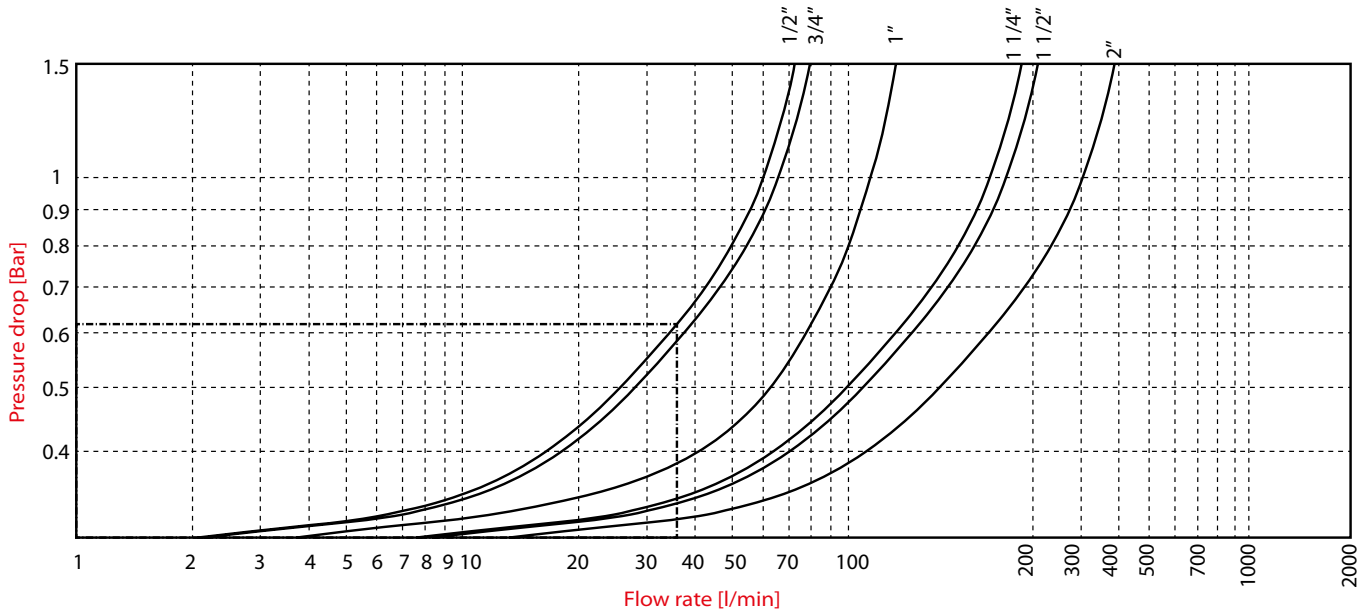

	1/2"	3/4"	1"	1"1/4	1"1/2	2"
Kv	3,6	4	6,6	9,6	10,2	18

INSTALLATION

For the best use and duration of the system, it is necessary to comply with the following instructions on installation, with the national regulations and with relevant local requirements.

- Place of installation has to be protected from frost and has to be easily inspectable
- Install the pressure reducing valve on the private water system, immediately downstream of the water meter
- It would be better to install shut-off valves upstream and downstream of the pressure reducing valve, to facilitate the maintenance operations
- In order to protect pressure reducing valve from overpressure, install a check valve immediately downstream of the pressure reducing valve
- The right scheme of installation is shown in Fig. 5.2
- In case of water heater downstream of the pressure reducing valve, install an expansion vessel between the valve and the water heater
- In order to avoid cavitation and therefore excessive noiseness, it is strongly recommended that the ratio between maximum upstream pressure and regulating downstream pressure does not exceed the value of 2,5.
- Pressure reducing valve is not a safety device. It would be better to install all the necessary safety relief valves.

Please, duly note the downstream pressure of the reducing valve has not to be higher than the maximum working pressure of the devices installed in the private water system, in order to avoid possible damages or malfunctions.

When the connection is made on the multi-threaded end the sealing must be done in the thread only.

Instruction on installation

1. Before installing the pressure reducing valve, open all the outlets to flush the system and expel any air left in piping
2. Install shut-off valves upstream and downstream to facilitate maintenance operations
3. For a right flow direction, use the arrow stamped on the body
4. ITAP pressure reducing valve can be installed in either vertical or horizontal piping. It can be installed also upside down
5. EUROPRESS are equipped with a threaded connection suitable for a pressure gauge. It is possible to unscrew the plug in order to install a pressure gauge in the size of 1/4". In such a position, the pressure gauge shows the downstream pressure of the reducing valve.
6. The whole range of ITAP pressure reducing valves are tested and adjusted with a downstream pressure of 3 bar (4bar Art.243). It is possible to change the downstream pressure by means of the adjusting device.

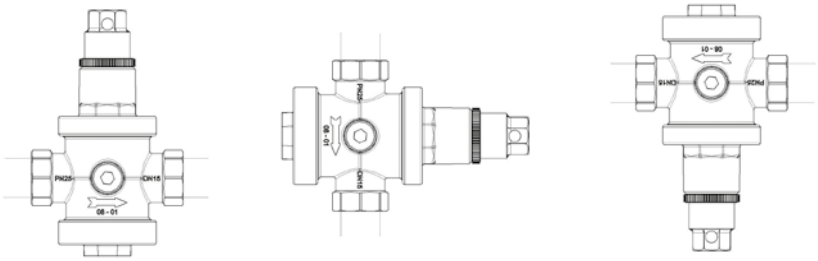

7. The final adjustment of the pressure reducing valve has to be carried out with a filled private water system and with all the outlets shut-off. The upstream pressure has to be at least 1 bar higher than the adjusted pressure. Adjustment of the pressure reducing valve to a downstream pressure different from the pre-adjusted one (3 bar for Art.143 and 143MM, 4bar for Art.243):

- Close the downstream shut-off valve
- Unscrew the nylon nut (Fig. 4.1)
- Adjustment is carried out by means of a tool or a screwdriver on the upper part of the device (Fig. 4.2); turn in clockwise way to increase the downstream pressure, turn in anticlockwise way to reduce the downstream pressure
- Open the outlets in the private water system, in order to check the stability of the adjusted pressure
- Adjust the downstream pressure with outlets totally shut-off and with water at room temperature only
- Screw the nylon nut (Fig. 4.3)
- Adjustment procedure is complete once the required pressure appears on the pressure gauge.


FIG. 4.1

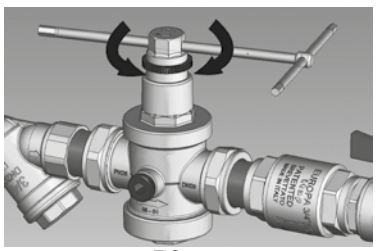
FIG. 4.2


FIG. 4.3

8. The use of PTFE as a sealant in junctions between pressure reducing valve and water pipings is only allowed.

Troubleshooting

Increase in pressure downstream on the pressure reducing valve with a water heater in-line. This problem is due to heating of the water, caused by the water heater. The pressure downstream increases, due to water expansion, as the pressure reducing valve is correctly closed. It is necessary to install an expansion vessel between the pressure reducing valve and the water heater to absorb the pressure increase (Fig. 5.1)

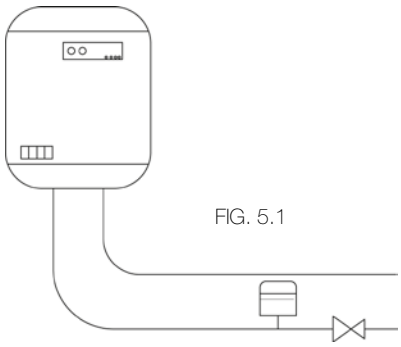

FIG. 5.1

The pressure reducing valve does not maintain the adjusted figure

In most cases, this problem is due to the presence of impurities on the valve seat, causing blow-by and consequent increase in the downstream pressure. **Install an Y-strainer upstream of the pressure reducing valve.** Carry-out the maintenance of the Y-strainer.
Flush the water system before installing the pressure reducing valve

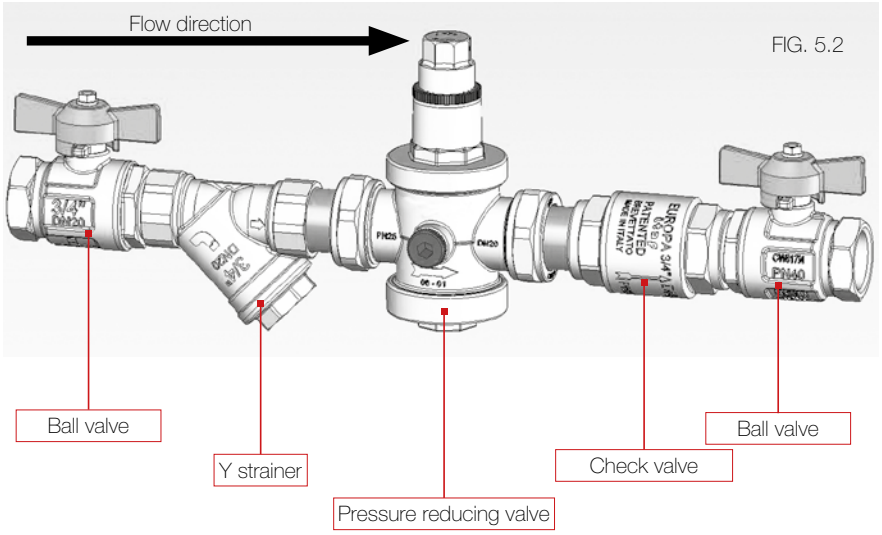

FIG. 5.2

Innovation Technology And People

ITAP S.p.A.
Via Ruca 19
25065 Lumezzane
Brescia (ITALY)
Tel 030 89270
Fax 030 8921990
www.itap.it - info@itap.it

We reserve the right to make improvements and changes to the products described herein and to the relative technical data, at any time and without forewarning.

rev. 102018-01